IOP Conf. Series: Materials Science and Engineering **450** (2018) 032015 doi:10.1088/1757-899X/450/3/032015

Determination of installation sites for anti-adhesive devices on the bucket of an EK-18 excavator

S A Zenkov

Bratsk State University, 40, Makarenko St., Bratsk, 665709, Russia

E-mail: mf@brstu.ru

Abstract. 3D rigid-body model of a bucket of power shovel EK-18 was built using modern CAD-software. A tetrahedral grid with 10-node second-order elements was chosen, and the given model was imported to APM WinMachine - model preparation preprocessor for finite element analysis. A finite element model was based on the geometrical model, imported from KOMPAS-3D to APM Studio. Calculation of stressed-strained state of the bucket was carried out under the forces emerging while digging with "back hoe" equipment. Shift, deformation and tension charts were planned and the most and the least strained areas were pointed out. Wet coherent soil excavation deals with soil adhesion to working bodies of power shovels and leads to reduced performance. Performance decrease is caused by reduction of useful bucket capacity and partial unloading, increased front resistance to cutting (digging) caused by wet soil adhesion to a working body, increased bucket entry resistance, increased idle time caused by necessity to clean working bodies. Also energy losses increase and quality of work drops because friction forces go up. Friction force while digging and levelling account for 30…70 percent of total digging resistance while performance decreases 1.2…2 times and more. However, the question of actuators location on the excavator bucket needs to be dealt with. The most suitable spots for mounting devices for reducing soil adhesion to the excavator bucket were defined. Such devices eliminates soil adhesion to bucket and increases efficiency of using power shovels with wet coherent soils.

1. Introduction

Successful functioning of enterprises depends on output of products which should meet certain demands, application area or purpose, cater to customer needs, conform to accepted standards and technical specifications, meet society interests, take into account environmental requirements, be available to customer on competitive price and be cost-effective.

To deliver competitive products an enterprise needs to release new products as soon as possible, cut production costs and improve quality. This process becomes easier with the application of modern automated design engineering systems, which streamline the whole production designing process – from concept formation to prototype building to commercializing it. Therefore, the process of developing new products becomes significantly faster without loss of quality.

Computer aided design (CAD) systems enable one to carry out tridimensional and two-dimensional geometric modelling, reverse engineering, design decision assessment, technical drawings generation.

The objective of CAD is to improve designing quality, lower material costs, reduce the time needed and prevent increasing number of engineers who performs designing and development.

Content from this work may be used under the terms of the Creative Commons Attribution 3.0 licence. Any further distribution of this work must maintain attribution to the author(s) and the title of the work, journal citation and DOI.
Published under licence by IOP Publishing Ltd

2. Research subject

Excavating machinery operation shows that soil freezing over and adhesion to working bodies significantly reduces machinery performance.

Abovementioned performance reduction is caused by reduction of useful bucket capacity and partial unloading, increased front resistance to cutting (digging) caused by wet soil adhesion to a working body, increased bucket entry resistance, increased idle time caused by necessity to clean working bodies. Also energy losses increase and quality of work drops because friction forces go up. Friction force while digging and levelling account for 30…70% of total digging resistance while performance decreases 1.2…2 times and more [1-9].

Piezoelectric ceramic actuators (transducers) are proposed as a solution to soil adhesion problem. Such transducers provide combined (vibration and thermal) exposure and can be mounted in the areas with the strongest adhesion. This effect is based on inverse piezoelectric effect.

Combined application of vibration and heating of working surface was researched [8]. Vibrothermal exposure causes new technological effect which results in wider efficient humidity range and significantly less friction force. There is less vibrator driving force required for disintegrating adhesion bonds. Vibration boosts contact layer heating which leads to reduced thermal energy costs.

However, at this point one needs to deal with the question of proper placement of piezoelectric ceramic transducers on excavator bucket.

3. Research objective

The given paper discusses the calculation of stressed-deformed state of EK-18 excavator bucket using CAD system APM WinMachine in order to locate the least stressed areas to place piezoelectric ceramic transducers.

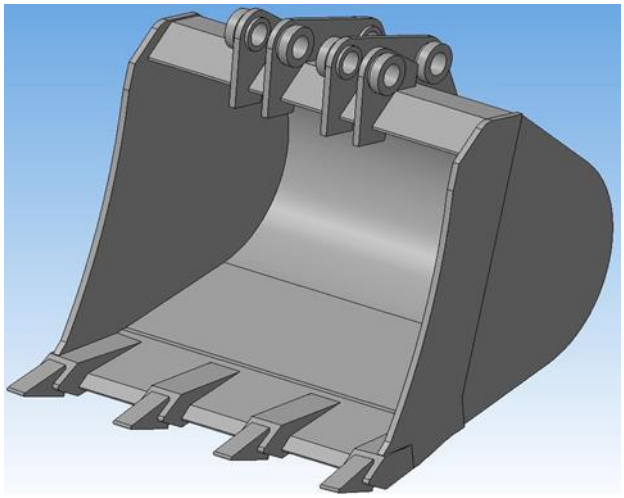

Figure 1. A tridimensional bucket model.

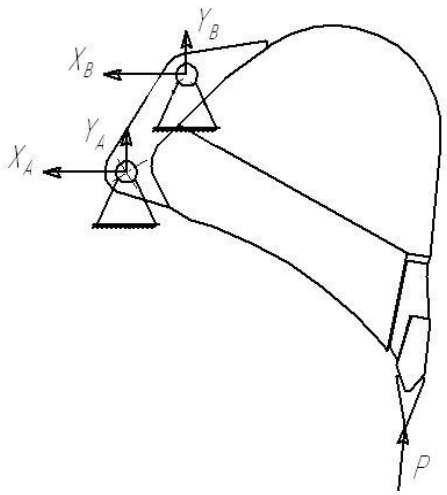

Figure 2. A chart for forces which affect the. bucket.

APM WinMachine is a system for automated analysis and designing mechanical equipment and machinery constructions. The system taps into latest achievements in computational mathematics, numerical methods and programming, theoretical and experimental engineering solutions. The system meet all the requirements of state standards and regulations that control design documents execution as well as computational algorithms.

Despite rich functional capabilities of APM WinMachine, creating tridimensional rigid-body models of parts and complex geometry constructions in this environment is quite demanding. This disadvantage

is compensated by enabling user to import files from other systems, where creating tridimensional models is easier and takes less time. Figure 1 presents tridimensional model of EK-18 excavator bucket, created using KOMPAS-3D software. The model was imported into preprocessor of model preparation for finite element analysis APM WinMachine. Then fixing points were selected and all the loads were applied according to the chart on figure 2. Load pattern complies to bucket position at the moment of digging into soil. XA, XB, YA, YB – bucket fixing (reactions of bearing), force P (excavator maximum digging effort), affecting the bucket via its teeth, was taken as 100 kN in accordance to technical specifications [10].

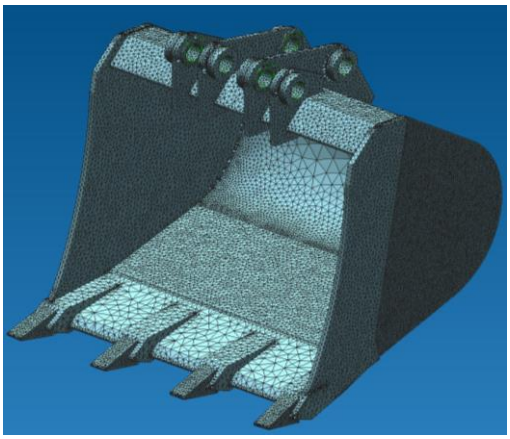

Figure 3. A bucket breakdown into finite elements using rigid-body modelling module in APM Studio.

Finite element model was generated in APM Studio and based on the geometrical model imported from KOMPAS-3D (figure 3). The grid chosen was tetrahedral one consisting of 10-node second-order elements. The number of finite elements equalled 210103, the number of nodes – 60465.

APM Studio includes tools for assembling preparation for calculation, border conditions and loads setting, as well as integrated finite element grid generators (both with fixed and varied pitch) and post-processor. This functional kit enables one to model rigid-body object and conduct complex analysis of design model behaviour in different conditions based on statics, eigenfrequencies, stability and thermal stress right in APM Studio module.

The given paper considers major load saffecting excavator bucket for different positions. The case of maximum load application is also analysed while the load is evenly distributed along the cutting edge and each of the teeth.

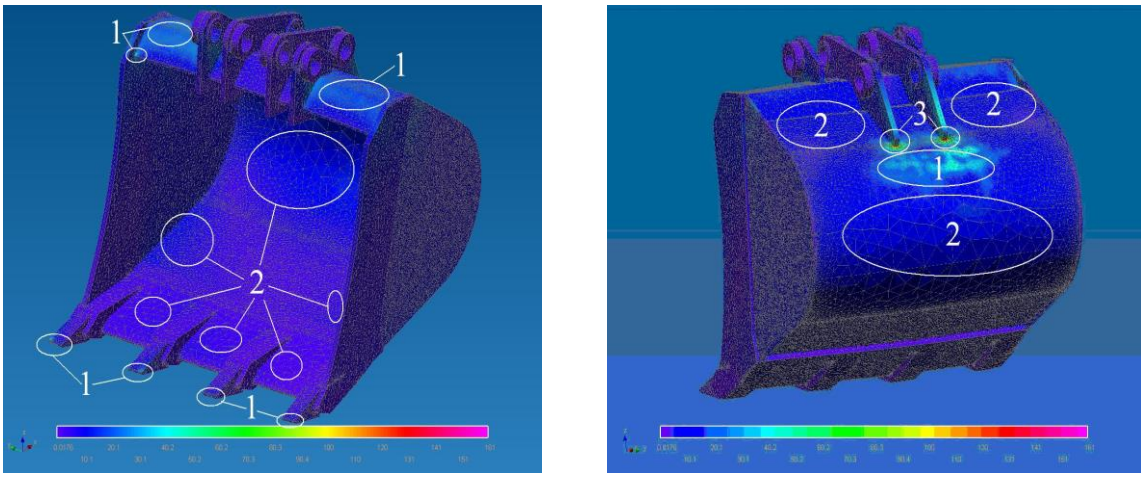

Figure 4. A bucket stress chart.

Component fields of stress tensors were obtained and relative shifts in EK-18 excavator bucket were identified using APM Studio software package for finite elements analysis under suggested problem statement within contact interaction mechanics.

4. Results analysis

Figure 4 shows tensions in a bucket with 25 kN load on each of the teeth, the chart corresponds to moment of digging. Principally tensions in a bucket equal 5-10 mPa (areas without highlight). Areas highlighted under number 1 have tensions 30-40 mPa, under number 2 – 10-20 mPa, number 3 – up to 160 mPa.

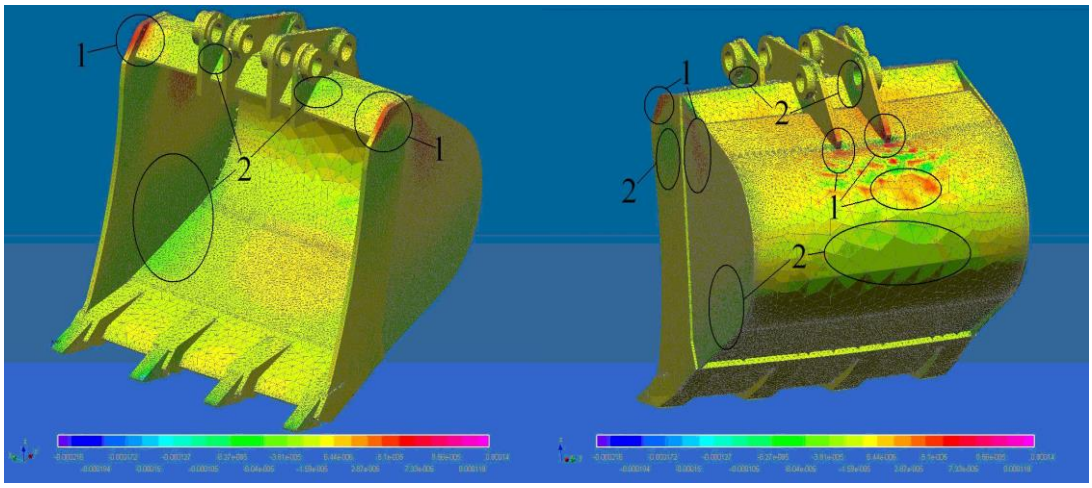

Figure 5. A bucket intermixtures chart.

The most stressed areas of a bucket are stress raisers – spots where stop blocks are mounted to back wall (number 3).

Figure 5 shows shifts with relation to fixture points: number1 – 1.2-1.4 mm; 2 – 0.8-1 mm; 3 – 0.6-0.7 mm; 4 – 0.1-0.2 mm; 5 – 0-0.2 mm. The biggest shift can be seen near the teeth which can be explained by concentrated load from the soil applied in these spots.

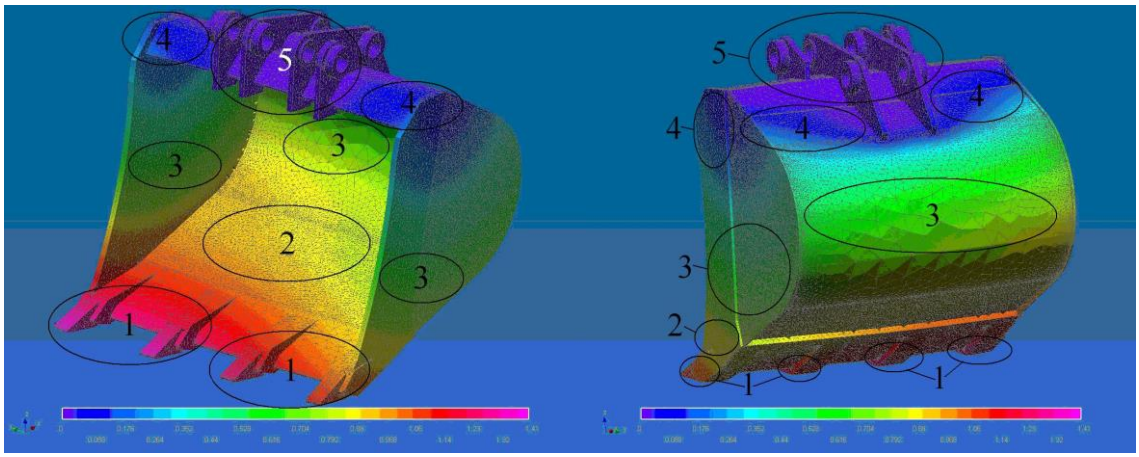

Figure 6. A bucket deformation chart.

Figure 6 shows deformations: 1 – 0.000070-0.000080 stretching; 0.000040-0.000080 shrinkage. Areas without a number experience 0.000006-0.000010 stretch.

The results obtained present an opportunity to modify the design to balance tensions in a bucket and avoid excess tension in some areas.

Possible areas to mount anti-adhesive devices are bucket back wall on either side of stop blocks fixing spots (figure 6) and areas where bucket back wall meets the bottom.

Technological solution is mounting a polymer anti-adhesive sheet (PAS) into the EK-18 excavator bucket with a volume of 0.65 m3 via the bolt fixture (figure 7). The considered bucket type requires 2.1 m2 of the polymer anti-adhesive sheet. The model of a bucket with a preventive layer was constructed in the KOMPAS-3D graphic editor.

Installation of PAS to the bucket working surface is made using metalware fixtures (bolts, screws, studs etc), and also by fixing a sheet with guiding rails or gibs.

Polymer sheets installation to the working surface of a bucket should be carried out perimeter-wise, avoiding fixing it to points of maximum ground load. This fixture method also allows one to prevent new adhesion centers caused by bolt or screw heads that emerge or are insufficiently dormant into the PAS surface. Butt joints, if lining is made by marrying a few sheets, should also be directed along soil movement.

Fixture span, bolt (screw) length and a diameter need to be defined by a product engineer at the operation spot. General guidelines are as follows: the bolt diameter should be commeasurable to sheet thickness (for sheets 8…10 mm thick, M10…M12 bolts (screws) can be used), fixture span – 300…500 mm. For increased reliability matching spacers can be put under bolt heads.

The point for bolts or another type of fixture can be located using previously made sheet perforation, or vice versa – pre-drilled holes in metal surfaces can be used to locate points of a sheet for drilling.

When operating temperature fluctuates within the range of 23…80 degrees, holes for PAS fixture should be made with clearance to compensate the coefficient of linear thermal expansion that equals 0.2…0,22 mm/(m*deg).

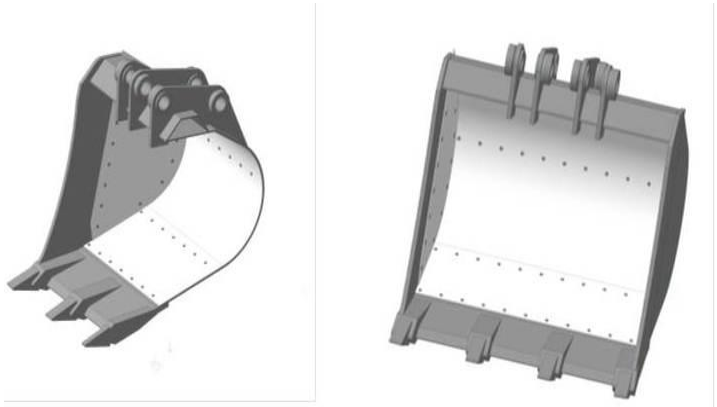

Figure 7. A model of the EK-18 excavator bucket with anti-adhesive sheets.

Heavy-walled sheets 20…50 mm thick can be fixed to metalware with M16 bolts and the 300…400 mm span by welding their heads to metalware and subsequent mounting of the sheets onto the bolts using pre-drilled holes and tightening the sheet core with nuts.

Using polymer anti-adhesive sheets allows to significantly simplify operating cycle when exploiting of soils with high adhesive properties. PPL-EI polymer coating with average shifting effort of 5…11 kPa. The difference between shearing stress for polymer anti-adhesive sheets and steel is apparent and estimates around 17…18 kPa, which is proved by an experiment. Polymer anti-adhesive sheets have various chemical compositions and structures with each type having been previously tested.



Figure 8. EK-18 excavator bucket lined with anti-adhesive sheets.

The proposed recommendations have been implemented by Bratsk Department of urban infrastructure, where anti-adhesive sheets were fixed to EK-18 excavators buckets without using metalware (Fig. 8). To prevent lifting of anti-adhesive sheets by cut soil, sheets edges have been covered with thin metal plates that do not increase soil resistance.

Using PPL-EI polymer anti-adhesive sheets with EK-18 excavator buckets for two years helped to reduce cycle duration by 17% when exploiting wet adhesive grounds under sub-zero temperatures by preventing adhesion and freezing of soil to a working body; as well as to reduce energy consumption due to improved bucket unloading.

References

[1] Rajaram G and Erbach D C 1999 *Journal of Terramechanics* **36** 39-49
[2] Sharma V K, Drew L O, Nelson L 1977 *Transactions of the ASAE* **20** 46-51
[3] Tong J 1993 *Study on reducing adhesion and resistance of soil to soil engaging components of machinery for land locomotion by bionics.* (Changchun: Jilin University of Technology)
[4] Tong J, Ren L, Yan J, Ma Y and Chen B 1999 *Int. Agricultural Eng. J.* **8** 1-22
[5] Wang X L, Ito N, Kito K and Garcia P P 1998 *J. of Terramech.* **35** 87-101
[6] Rajaram Gand Erbach DC 1999 *Journal of Terramechanics* **36** 39-49
[7] Zadneprovsky R P 1992 *Working bodies earthwork and reclamation machines and equipment for soil and high humidity materials* (Moscow: Mashinostroenie) p 176
[8] Buturovich I and Han Duc Kim 1969 Calculation curved concentrators *Trudy LPI* **309** 169
[9] Zenkov S A, Kurmashev E V and Krasavin O Y 2009 Analysis of increasing the productivity of excavators at the use of piezoceramic transducers *Systems Methods Technologies* **4** 38-41
[10] Azadegan B and Massah J, 2012 Effect of temperature on adgesion of clay soil to steel, *Agronomic Research in Moldova* **XLV2(150)** 21–7
[11] Kozik A S, Buylov O A, Zenkov S A and Zenkov A S 2011 Finite-element research of EO-3323 excavator bucket in stressed-deformed condition *Mechanics to XXI century* **10** 143-5