IOP Conf. Series: Materials Science and Engineering **444** (2018) 052010 doi:10.1088/1757-899X/444/5/052010

Rowing: the influence of the angle of inclination of the leg support on the force in the paddle

E Budescu[1], Eug. Merticaru[1] and M Chirazi[2]

[1]Mechanical Engineering, Mechatronics and Robotics Department, "Gheorghe Asachi" Technical University of Iasi, Iasi, Romania
[2]Physical Education and Sports Faculty, "Alexandru Ioan Cuza" University of Iasi, Iasi, Romania

E-mail: emil.budescu@gmail.com

Abstract. This study is aiming to emphasize the relation between the force at the paddle and the inclination angle of the support of the leg on the skiff, depending on the anthropometric dimensions of the sportsman. This angle, which is adjustable, makes the reaction force between the support and the leg to be decomposed into two components, namely: a horizontal component equivalent to the force at the paddle and a component along the support which is determining the sliding force between the leg and the support. The reaction force between the leg and the support depends also, on the anthropometric dimensions of the thigh and the shank as well as on the extension angles of the thigh and shank. The whole assembly formed of shank, thigh and the sliding chair on which the sportsman is sitting can be likened to an eccentric crank-piston mechanism. The numerical study emphasized that the increasing angle of inclination of the support produces the increasing of the horizontal component of the reaction force leg-support. On the other side, when the shank and the thigh are in prolongation, the inclination angle of the support has to be around 75 degrees so that the entire sole of the foot to be in contact with the support. Using the relations emphasized in the paper, there can be determined the optimum angle, personalized, for each sportsman.

1. Introduction

The sport performance at the canoeing depend on both sportsman, by its work and talent, as well as the technical equipment, through the technical characteristics of the kayak. This sport performance is given by the speed of kayaking, respectively to obtain the best time for the distance run.

An important parameter that determines the speed of the boat is represented by the force in the paddle during the active stroke, that is the force imposed by the sportsman to the boat [1, 2, 3, 4]. The experimental determinations, starting from the balance of moments of force in the outrigger boat, revealed the variation curves of force depending by time, at the different of paddling rhythm, at the performance sportsmen, boys or girls [5]. More accurate experimental determinations of the pressure exerted on the paddle were obtained by means of pressure sensors [6]. Have also determined by experimental measurements the hand force exerted on the ground training equipment cable, at the magnetic brake ergometer and have been determined the foot force on the foot support, using a Kistler force platform [7].

The theoretical calculation of the power developed by the sportsman on the boat can take into account the force developed in the handle of the paddle and the linear velocity of the handle, by the moment of the force in the handle of the paddle, the torque determined as against the outrigger boat

Content from this work may be used under the terms of the Creative Commons Attribution 3.0 licence. Any further distribution of this work must maintain attribution to the author(s) and the title of the work, journal citation and DOI.
Published under licence by IOP Publishing Ltd

and the angular speed of the paddle against the outrigger boat or the forces developed both by the hand and by the sportsman's foot, as well as by the linear speeds that these forces impose of the boat [8].

The skiff foot support was also ergonomically analyzed using the finite element method for its design [9]. The basic criterion for redesigning this support was that of leg comfort during the sporting race.

The use of classical mechanics equations, based on Newtton's second law, allows for an analytical link between the total force for the propulsion of the boat, the push force of the paddle in the water, the masses of the boat and of the sportsman, as well as the acceleration of the boat and the movement of the sportsman in the boat [10, 11, 12].

The paper aims to develop the mathematical relations of the pushing force of the foot into the skiff foot support, depending on the anthropometric dimensions of the sportsman.

2. Theoretical considerations

In the figure 1 there is presented schematically the sportsman sitting on the chair of the skiff and rowing. The chair of the skiff is sliding on the guide and is performing a translation motion from front to back of the skiff when the sportsman is rowing and pushing with the legs on the support of the foot (figure 1).

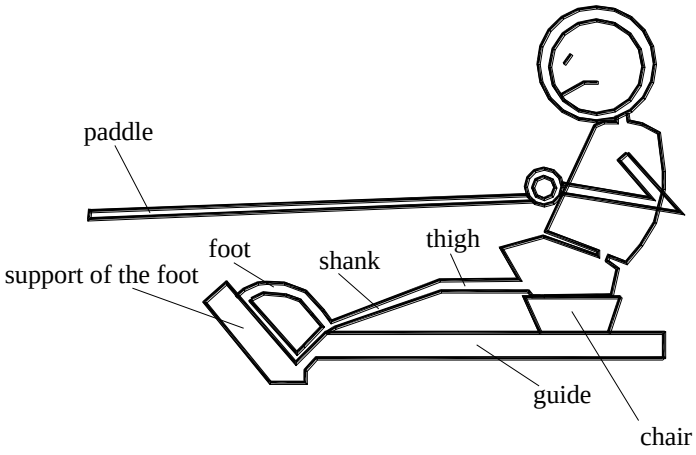

Figure 1. The sportsman sitting on the chair of the skiff.

The assembly sportsman-chair can be likened to a crank-piston linkage (figure 2).

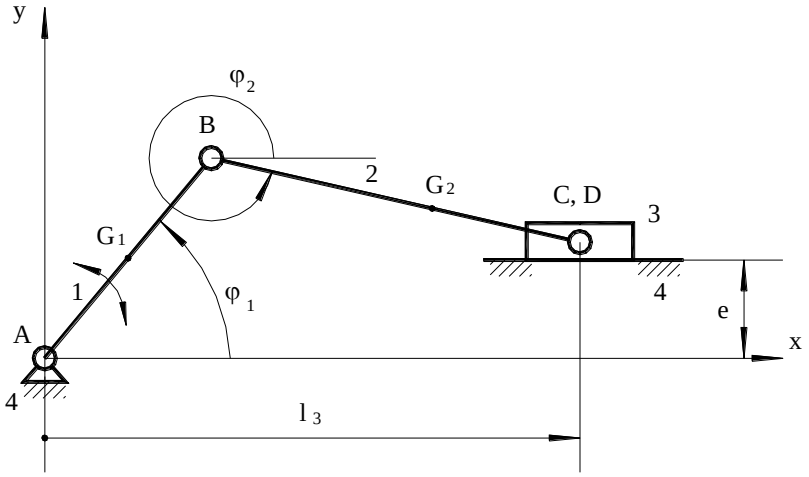

Figure 2. The crank-piston linkage likened to assembly sportsman-chair.

In figure 2, the element 1 (AB) is the shank, the element 2 (BC) is the thigh and the element 3 (the piston) is represented by the body of the sportsman with the chair of the boat. The rotation joint A is represented by the ankle joint. The rotation joint B is represented by the knee joint. The rotation joint C is represented by the hip joint. The translation joint D is the translation joint between the chair and the boat.

On the element 3 is acting the force F_3 which is resulting from the rowing activity of the sportsman.

We are aiming to determine the reaction force R_{41} in joint A.

We are taking into account the gravity forces of the body segments:

F_{g1}- the gravity force of the shank acting in the mass center G_1;

F_{g2}- the gravity force of the thigh acting in the mass center G_2;

F_{g3}- the gravity force of the body of the sportsman plus the weight of the chair, acting in point D.

The inertia forces and friction forces are neglected.

After performing the kinetostatic analysis for the linkage in figure 2, there results:

$$R_{43x}=0 \tag{1}$$

$$R_{43y}=\frac{BG_2}{BC}\cdot F_{g2}+F_{g3}-F_3\cdot tg\varphi_2 \tag{2}$$

$$R_{23x}=F_3 \tag{3}$$

$$R_{23y}=-\frac{BG_2}{BC}\cdot F_{g2}+F_3\cdot tg\varphi_2 \tag{4}$$

$$R_{12x}=F_3 \tag{5}$$

$$R_{12y}=\left(1-\frac{BG_2}{BC}\right)\cdot F_{g2}+F_3\cdot tg\varphi_2 \tag{6}$$

$$R_{41x}=F_3 \tag{7}$$

$$R_{41y}=F_{g1}+\left(1-\frac{BG_2}{BC}\right)\cdot F_{g2}+F_3\cdot tg\varphi_2 \tag{8}$$

$$M_1=AB\cdot\left[F_3\cdot\left(\cos\varphi_1\cdot tg\varphi_2-\sin\varphi_1\right)+\left(1-\frac{BG_2}{BC}\right)\cdot F_{g2}\cdot\cos\varphi_1\right]+AG_1\cdot\cos\varphi_1\cdot F_{g1} \tag{9}$$

where:

- R_{43x} and R_{43y} are the x and y components of reaction force R_{43} in joint D;
- R_{23x} and R_{23y} are the x and y components of reaction force R_{23} in joint C;
- R_{12x} and R_{12y} are the x and y components of reaction force R_{12} in joint B;
- R_{41x} and R_{41y} are the x and y components of reaction force R_{41} in joint A;
- M1 is the torque acting in joint A.

After calculating the reaction forces in kinematic joints A, B, C and D we want to determine the forces appearing at the contact between the foot and the support of the foot (figure 3).

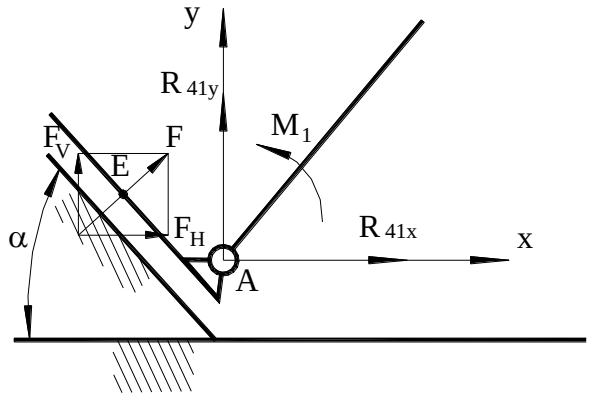

Figure 3. The forces at the contact between the foot and the support.

After writing the equilibrium equations and processing them, there results:

$$AE=\frac{-M_1}{F} \tag{10}$$

where

$$F_H=F\cdot\sin\alpha=F_3 \tag{11}$$

$$F_V=F\cdot\cos\propto=F_{g1}+F_{g2}\cdot\left(1-\frac{BG_2}{BC}\right)+F_3\cdot tg\varphi_2 \tag{12}$$

From relations (11) and (12) it yields:

$$F_3=\frac{tg\propto\cdot\left[F_{g1}+F_{g2}\cdot\left(1-\frac{BG_2}{BC}\right)\right]}{1-tg\propto\cdot tg\varphi_2} \tag{13}$$

3. Numerical results

Some calculations were done taking into account the following input data:

- for in individual of height H=1.85 m whose mass is m=80 kg.
- the length of the shank AB=0.455 m, the mass of the shank m_1=3.72 kg and AG_1=0.258 m.
- the length of the thigh BC=0.453 m, the mass of the thigh m_2=8 kg and BG_2=0.257 m.

For this individual measurements were done for the angles φ_1 and φ_2 as presented in table 1.

Table 1. Angles φ_1 and φ_2 .

φ_1 (degrees)	φ_2 (degrees)
88	344
58	312
54	361
53	352
29	355
20	20

The angle α was varied from 20° to 85°.

After calculus, the variation of force F_3 depending on the angle α is presented in figures 4,5,6,7,8.

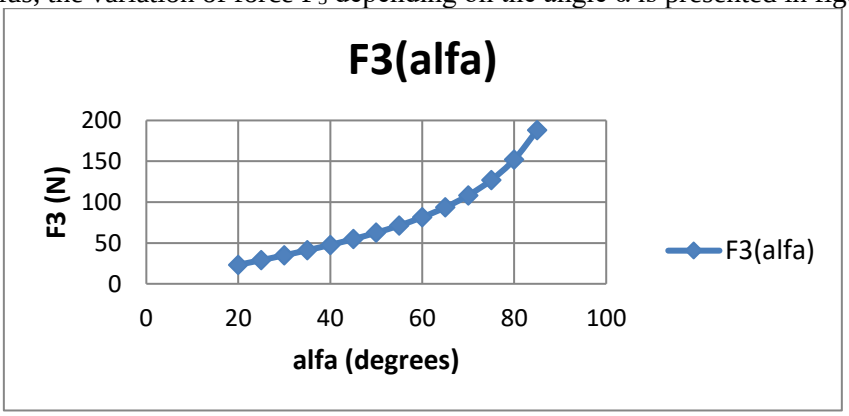

Figure 4. The force F_3 depending on angle α when φ_2=344°.

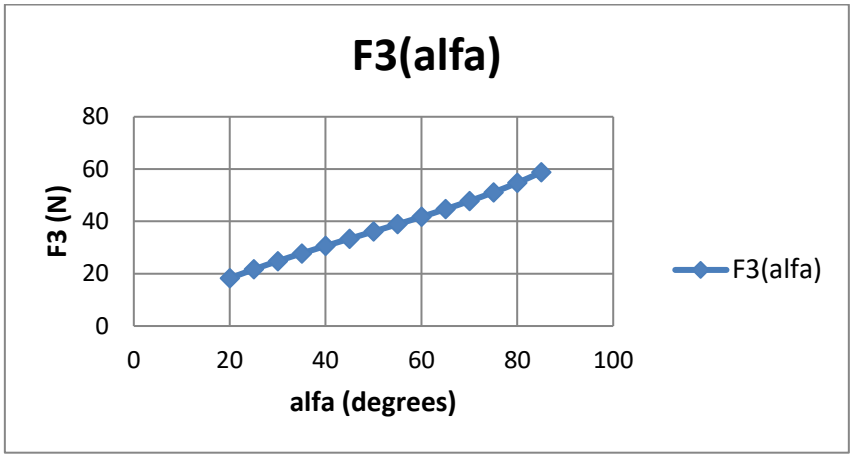

Figure 5. The force F_3 depending on angle α when φ_2=312°.

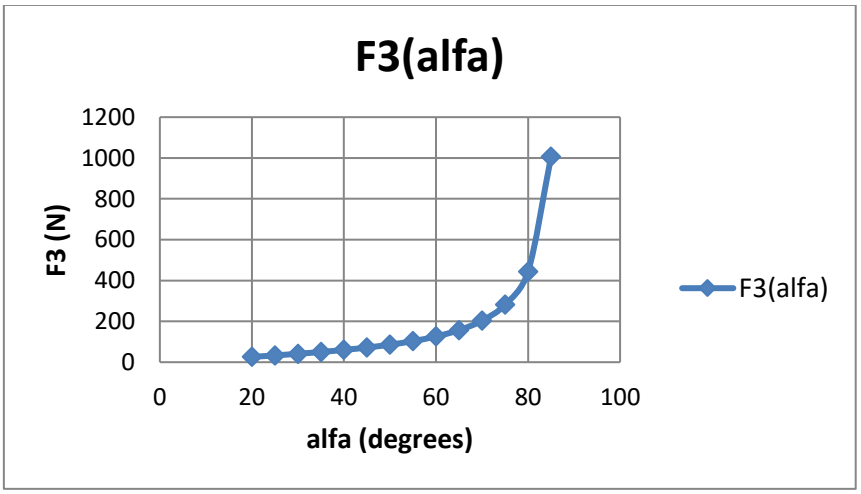

Figure 6. The force F_3 depending on angle α when φ_2=361°.

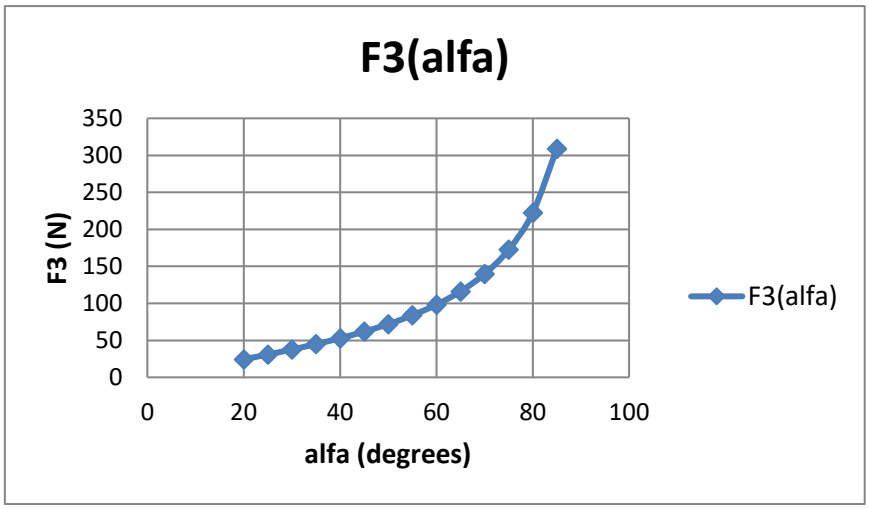

Figure 7. The force F_3 depending on angle α when φ_2=352°.

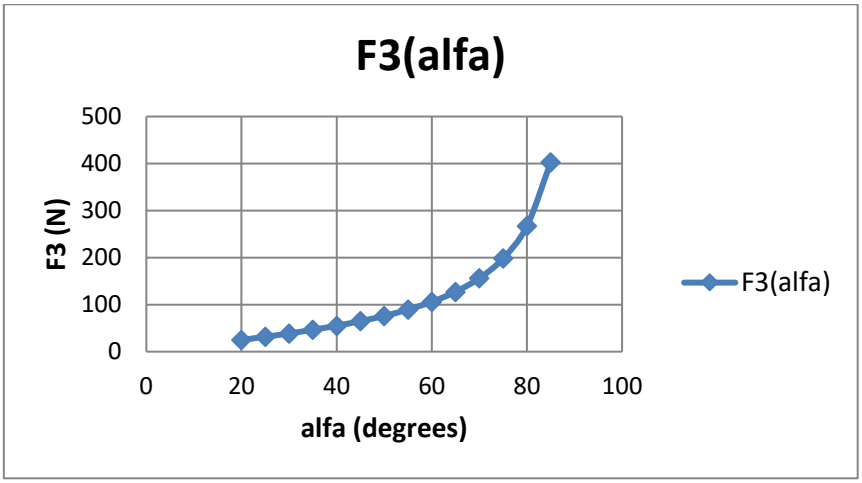

Figure 8. The force F_3 depending on angle α when φ_2=355°.

From the figures 4-8 there can be seen that, as the angle α is increasing, the force F_3 is increasing.

However, the angle α has to be maintained to a certain value depending on the ergonomics, so that the sportsman to be comfortable with its position.

4. Discussions and conclusions

The reaction force between the support and the foot is divided into two components, namely: a horizontal component, the equivalent of the force in the paddle and a component along the support, which determines the sliding force between the foot and the support.

The reaction force between the foot and the foot is also dependent on the anthropometric dimensions of the sportsman's thigh and shank, as well as the extension angles of the thigh and shank.

The numerical study revealed that as the angle of inclination of the support increases, the horizontal component of the foot-force reaction increases. On the other hand, when the thigh and thigh are in the extension, the angle of inclination of the support, so that the entire sole of the foot is on the support, has a value of about 75 degrees.

Through the relationships shown in the work, the optimal, personalized angle can be determined for each sportsman. Thus, if the adjustable angle α is fixed at 45 °, at the maximum active stroke of the paddle, respectively when the thigh and the shank are in the extension, the foot will have the natural tendency of plantar flexion, the fulcrum being carried out only on the anterior part of the sole of the foot.

References

[1] Michael J S, Smith R, Rooney K B 2009 Determinants of kayak paddling performance *Sports Biomech.* **8** pp 167-179 PubMed doi:10.1080/14763140902745019

[2] Brown M B, Lauder M, Dyson R 2011 Notational analysis of sprint kayaking: Differentiating between ability levels *Int J Perform Analy Sport* **11** pp 171–183

[3] Sperlich J, Baker J Biomechanical testing in elite canoeing *Book of Abstracts*, 20th International Symposium on Biomechanics in Sport, Extremadura, Spain 2002 pp. 44-47

[4] Jackson P S 1995 Performance prediction for Olympic kayaks. *J Sports Sci.* **13** pp. 239-245 PubMed doi:10.1080/02640419508732233

[5] Gomes B B, Ramos N V, Conceição F A V, Sanders R H, Vaz M A P, Vilas-Boas J P 2015 Paddling force profiles at different stroke rates in elite sprint kayaking *Journal of Applied Biomechanics* **31**(4) pp. 258-263 https://doi.org/10.1123/jab.2014-0114

[6] Helmer R J N, Farouil A, Baker J, Blanchonette I Instrumentation of a kayak paddle to investigate blade/water interactions *Procedia Engineering* Special issue: 5th Asia-Pacific

Congress on Sports Technology. 2011 **13** pp. 501-506
[7] Gordon D, Robertson E, Fortin Y D Mechanics of rowing *https://documen.site/download/no-slide-https://documen.site/download/no-slide-title-445_pdf* School of Human Kinetics. University of Ottawa, Ontario, Canada
[8] Kleshnev V 2004 Three methods of the rowing power calculation *Rowing Biomechanics Newsletters* **4**(39) *http://www. biorow.com/RBN_en_2004.htm*
[9] Madura J, Pierson D Rowing foot stretcher design *Degree of Bachelor of Science* 2012 *https://web.wpi.edu/Pubs/E-project/Available/E-project-042512-222238/unrestricted/MQP_ Final_Report_4_26.pdf* Worcester Polytechnic Institute USA
[10] Caplan N 2009 The influence of paddle orientation on boat velocity in canoeing *International Journal of Sports Science and Engineering* **3**(3) pp. 131-139
[11] Jones C J F P, Miller C J N 2002 The mechanics and biomechanics of rowing *Report at York City Rowing Club* https://www.rowperfect.co.uk/wp-content/uploads/2013/11/The-Mechanics-and-bio-2011dd.pdf
[12] Mann R V, Kearney J T 1980 A biomechanical analysis of the Olympic- style flatwater kayak stroke *Medicine and Science in Sports and Exercise* **12**(3) pp. 183-188