Determination of optimal parameters for rapid prototyping of the involute gears

R Mitrovic[1], Z Miskovic[1], M Ristivojevic[1], A Dimic[1], J Danko[2], J Bucha[2] and M Rackov[3]

[1]University of Belgrade, Faculty of Mechanical Engineering, Kraljice Marije 16, 11000 Belgrade, Serbia
[2]Institute of Transport Technology and Designing, Faculty of Mechanical Engineering, Slovak University of Technology in Bratislava, Slovakia, Nam. Slobody 17, 812 31 Bratislava, Slovakia
[3]University of Novi Sad, Faculty of Technical Sciences, Trg Dositeja Obradovića 6, 21000 Novi Sad, Serbia

E-mail: adimic@mas.bg.ac.rs

Abstract. Nowadays, rapid prototyping technologies are available at very affordable prices. This is the main reason why they are being used in almost all industry sectors. 3D printers are currently being widely used for rapid prototyping and development of the new products. However, taking into account the permanent progress of rapid prototyping materials mechanical characteristics (usually different kinds of plastics), 3D printers are sometimes used even for production of the failed parts replacements – operating at the low load and rotational speed conditions. This is the main goal of this paper – to establish optimal 3D printing parameters (printing direction, layer height and percent of infill) which will allow printed gears to replace failed steel gears, for at least some time, enough for spare steel gears to be produced and delivered on site. Taking into account previously mentioned facts, the application of the 3D printed gears can potentially provide the reduction of maintenance delays in different industrial facilities (factories, workshops, etc.) which will consequently lead to significant energy and financial savings.

1. Introduction

Cylindrical gear drives (gear pairs with parallel rotation axis) represent the most compelling group of all mechanical power transmission drives. Approximately 50% of all mechanical power transmissions are made of cylindrical gear drives [1]. Taking this fact into account, it can be concluded that their application domain is very broad, i.e. cylindrical gear drives are found in the widest possible range of machines, from complex ones such as: aircraft, ship, excavator, to the simplest ones, such as everyday appliances: mixer, hand drill, printer, etc. Since the proper functioning of cylindrical gear drives significantly influences the quality of everyday life, it is necessary to constantly improve them in terms of more precise calculation methods [2], application of new materials, improvement of manufacturing procedures, etc., all in order to increase their working safety and reliability. Bearing in mind the ecological, energetic and economic crisis generated at the end of the twentieth century, cylindrical gear drives need to meet up additional conditions aimed at reducing the above problems.

Content from this work may be used under the terms of the Creative Commons Attribution 3.0 licence. Any further distribution of this work must maintain attribution to the author(s) and the title of the work, journal citation and DOI.
Published under licence by IOP Publishing Ltd

No matter how complex a machine system in which gear drives are located is, their basic role does not change significantly. Their main task is to transfer and / or transform the power and movement from a machine that produces power, to a machine that performs useful work, with as much efficiency and safety as possible. For these reasons, even the minimal improvement in the operation of cylindrical gear drives is greatly encouraged. The failure of cylindrical gear drives is relatively unexpected, because their design is done in a way that, conditionally speaking, they have an unlimited operational lifetime. However, when sudden failures of these machine elements occur, they can induce unexpected delays, i.e. significant material and other losses. The reason for this phenomenon lies in the fact that cylindrical gear drives almost always represent a "heart", i.e. the vital part of the machine construction.

For the production of cylindrical gears, the most commonly used material is metal, primarily steel and its alloys, because there is a diminished opinion that other groups of materials are not a worthy replacement for the ones mentioned above. One of the main criteria for which the steel is the first choice in the designing of cylinder gears, while in the current engineering practice, other materials (mostly sintered materials and polymers) have been reserved for cylindrical gears which either work under conditions of light load or serve exclusively for the transfer of motion, is its strength. However, the unstoppable development in the field of polymers increasingly puts into question the position of steel as the only material for the production of highly loaded machine parts. Polymers (plastics) consist of macromolecules, frequently in the form of large molecular chains in which the atoms are held together by covalent bonds, whereas the bonds between the different chains are much weaker [3]. One of the main posed questions is to which extent and for how long (in terms of load and speed) polymer gears can replace those made of steel. Some of the main industrial branches in which parts made of polymer are widely used even, for the most responsible functions, are: aerospace [4], aviation [5], energy [6], biomedicine [7], etc.

One of the main advantages of polymers, compared to steel, is that a vast array of manufacturing processes has been developed recently, which enable very fast (rapid) production of parts. The field of the technique that deals with the fast manufacture of prototypes and parts, all based on the Computer Aided Design (CAD) model, is called rapid prototyping. The technologies that enable this kind of manufacture are called additive technologies (AD). The term additive manufacturing refers to the technology or additive process of depositing successive thin layers of material upon each other, producing a final three-dimensional product, in contrast to conventional subtractive manufacturing (SM) methods (removing layers of material to reach the desired shape) [8]. An overview of the key differences between the AM and the conventional SM can be found in papers [9-11]. Some of the main advantages that different authors point out are: material efficiency, resource efficiency, part flexibility, production flexibility, etc. The obvious advantage of the use of additive technologies in relation to conventional methods of manufacture, in the case of the production of cylindrical gear is given in the Figure 1 [12]. For the example shown in the Figure 1, material yield in conventional forging is 31%, and for additive manufacturing it’s 86%. The effectiveness of these technologies is so great that even high quality metallic materials that can be used in the manner described above are already being produced [13]. The most accepted division of AM technologies, as well as the additional materials used are shown in Table 1 [14], while the main advantages of AM application relative to conventional manufacturing are shown in Table 2 [9]. Of all the additive technologies listed in Table 1, the broadest domain of application has the FDM procedure. FDM employs thermoplastic materials injected through indexing nozzles onto a platform. Thermoplastics are materials that repeatedly soften, or melt, when heated, and harden, or freeze, when cooled. Thermoplastics have greater toughness, or resistance to impact loads, than some other plastic materials. However, their upper temperature limit is only about 120 °C. Above this temperature, thermoplastics lose about 50% of their rated room temperature strength. Polymers most commonly used in the manufacture of machine parts are from the thermoplastic group: polyamide (PA or Nylon), polyoxymethylene (POM) and acrylonitrile butadiene styrene (ABS).

Table 1. AM technologies classification.

AM technologies	Materials used
VAT photopolymerization	
Stereolithography (SLA)	
Digital light processing (DLP)	Plastic
Continuous digital light processing (CDLP)	
Material extrusion	
Fused deposition modelling (FDM)	Composite, plastic
Material jetting	
Material jetting (MJ)	Plastic
Nanoparticle jetting (NPJ)	Metal
Drop on demand (DOD)	Wax
Binder jetting	
Binder jetting (BJ)	Gypsum, sand, metal
Powder bed fusion	
Multijet fusion (MJF)	Plastic
Laser sintering (SLS, DMLS/SLM)	Plastic, Metal
Electron beam melting (EBM)	Metal
Direct energy deposition	
Laser engineering net shape (LENS)	Metal
Electron beam AM (EBAM)	Metal
Sheet lamination	
Laminated object manufacturing (LOM)	Composite, paper

Table 2. Advantages over SM.

Areas of application
Rapid prototyping
Reduce time to market by accelerating prototyping
Reduce the cost involved in product development
Making companies more efficient and competitive at innovation
Production of spare parts
Reduce repair times
Reduce labour cost
Avoid costly warehousing
Very complex work pieces
Produce very complex work pieces at low cost
Rapid manufacturing
Directly manufacturing finished components
Relatively inexpensive production of small numbers of parts
Component manufacturing
Enable mass customization at low cost
Improve quality
Shorten supply chain
Reduce the cost involved in development
Help eliminate excess parts
Rapid repair
Significant reduction in repair time
Opportunity to modify repaired components to the latest design

Figure 1. Comparison of materials used for conventionally forged cylindrical involute gear (top) and the equivalent powder forged involute gear (bottom).

Some of the main advantages of plastic gears are: relative low cost (particularly for high volume injection moulded gears), ease and speed of manufacture, wide range of configurations and complex shapes possible, elimination of machining and finishing operations, capability of fabrication with metal inserts and integral designs, lower density (light weight and low inertia), ability to damp moderate shock and impact, ability to operate with minimal or no lubrication, low coefficient of friction, smooth and quiet operation, lower critical tolerances than with metal gears - due in part to their greater resilience and resistance to corrosion; while some of the main disadvantages are: Maximum load-carrying capacity lower than metal gears, reduced ability to operate at elevated temperature, ambient temperature and temperatures at tooth contact surface must be limited, plastic gears cannot be additively manufactured to the same accuracy as high-precision machined/finished metal gears, plastic gears are subject to greater dimensional instabilities due to their greater coefficient of thermal expansion and moisture absorption, etc. [15].

2. Model of the desired gear

AM technology consists of five basic steps [11]:

1. A computerized 3D solid model is developed and,
2. Converted into a standard AM file format such as the traditional standard tessellation language format or the recent additive manufacturing file format;
3. The file is sent to an AM machine where it is manipulated, e.g., changing the position and orientation of the part or scaling the part;
4. The part is built layer by layer on the AM machine;
5. Cleaning and finishing the model if needed.

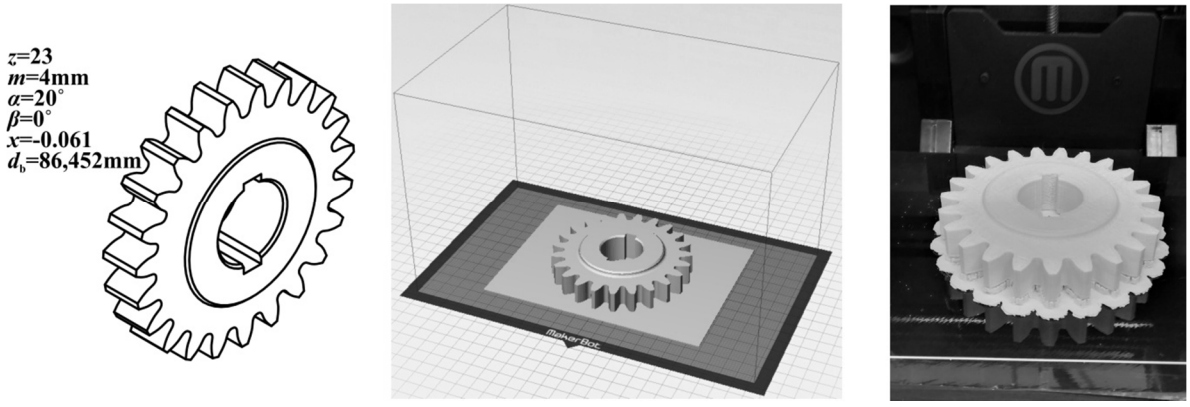

Figure 2. Transformation process from CAD to printed model.

In order to get desired part to be printed it is necessary to create its CAD model. Figure 2 shows the printing process of a desired involute gear graphically. The drawing of the gear in the same figure (on the left) also contains some of the basic parameters of the model's involute gearing. The CAD file of the gear was made using Autodesk Inventor® Professional 2014. Figure 2 (middle) shows positioning of the involute gear in the printing area, and in the picture on the right the printed involute gear is shown. The gear was AM by using FDM 3D printing process, using the 3D printer Replicator 2X, MakerBot (USA).

Regardless of the daily progress of these technologies, their geometrical accuracy is still a major drawback, which is particularly evident in a parts that require high accuracy, such as involute gears. The main reasons for these inaccuracies are: design/software related inaccuracies, process related inaccuracies and material related inaccuracies (shrinking and warping) [16].

3. Printing parameters of involute gear

As the costs associated with 3-D printing have decreased and its practicality has increased, the technology has captured both the interest and imagination of consumers and scientists alike [9]. The progressive development and more affordable commercial availability of 3D printing equipment have led to the emergence of 4th generation of 3D printers on the market. This extension of the assortment of 3D printing equipment brought with it a number of influential printing parameters and selection of their optimal values became a real art. The last sentence is especially gaining in weight if it is known that all characteristics of the manufactured parts depend on these parameters. The basic set of 3D printing parameters consists of the following: Percentage of infill, number of shells (outline/perimeter shells), layer height, extruder temperature, printing speed, etc. In addition to these direct printing parameters, through which the user can influence the properties of the printed part, there are other influential factors that significantly affect the usefulness of the printed model, such as the choice of material and the printing angle. This paper deals with the definition of the optimal printing parameters of involute cylindrical gears from the aspect of printing and manufacturing precision, with the following parameters selected as the most influential: Infill percentage, printing angle, printing material and layer height.

3.1. Infill percentage

Material of the model that does not belong to the outer contours or partition shells is called infill. Infill provides the object with an internal support structure. The selected value of this parameter defines the mechanical characteristics (strength) of the printed object. For a hollow object with no internal support structure, infill is 0%. For a completely solid object, infill is 100% [17]. It can be instinctively perceived that more infill will increase the strength, but weight gain should also be considered. In addition to weight limits, significant factors influencing the selection of infill are the printing time and type of used 3D printer. The limited resources of the printer used in this work have led to a failure of all attempts to print a model with 100% infill. Figure 3 shows an unsuccessful printing attempt of the model with 100% infill. Also, the problem with the printing of the 100% infill model is its printing time, which was approximately 18 hours in the mentioned case. This may be a particular problem if the purpose of a printed involute gear is to replace a damaged one, or a hasty recovery of an unexpected accident. It can be also noticed that the melted plastic fibre has lost its expected continuity every time in the unsuccessful printing of the model. In order to overcome this problem, the percentage of infill was gradually reduced until a successful printing of the involute gear was achieved. In this case, it turned out that the infill percentage for successful printing amounted to 95%. Figure 4 shows the successfully printed involute gear with 95% infill percentage.

Figure 3. Unsuccessful printing of involute gear with 100% infill.

Figure 4. Successful printing of involute gear with 95% infill.

3.2. Printing angle

The printing angle is a parameter that has attracted the attention of a large number of researchers, for example papers [8, 18]. All authors agree that the printing angle significantly influences, in the first place, the mechanical characteristics of printed models. The laying of melted material layers at the desired angle is accomplished by manipulating the model, i.e., relative inclination of the model with respect to the printing platform, since the extruder prints the horizontal threads which are parallel to the printing platform. When selecting this parameter, care must be taken that the material fibres are oriented parallel to the direction of the active load in order to obtain favourable mechanical properties. Figure 5 gives stress-strain curves of standardized tensile strength test samples made from ABS plastic. The left diagram refers to the case where the printing angle between the direction of the axial force and the layer of the material is 90°, the middle diagram is for the case when this angle is 45°, and the right diagram is for the case when the direction of the acting force and layers of the material coincide. Based on the previous experiences and available scientific papers [8, 18], the printing angle is selected in a way that the direction of the layers of the material coincides with the direction of the involute gear's teeth normal force. This printing angle is achieved by positioning the model on the printing platform in the manner shown in Figure 2 (middle).

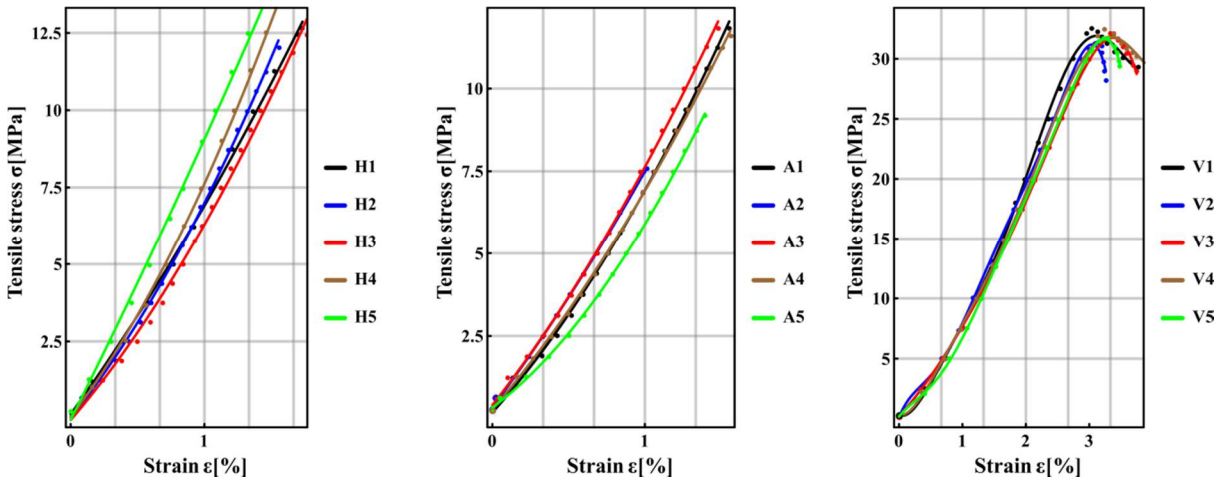

Figure 5. Impact of the printing angle on the tensile strength of the standardized samples.

3.3. Printing material

The material used for the involute gears production is industrial strength ABS plastic fibre (diameter 1.75 mm) – purposely developed for the mentioned 3D printer, and polylactide (PLA) plastic. Each of the selected materials has specific advantages. A detailed overview of the each material characteristics are given in the Table [19].

Table 3. Properties of the used materials.

	Tensile strength [MPa]	Elongation[%]	Flexural Modulus [GPa]	Density [g/cm^3]	Melting point [°C]	Biodegradable	Glass transition temperature [°C]	Spool price (1kg, 1.75mm, black) [USD $]
ABS	27	3,5-50	2,1-7,6	1,0-1,4	N/A	No	105	21,99
PLA	37	6	4	1,3	173	Yes	60	22,99

ABS is a common thermoplastic well known in the injection moulding industry. It is used for applications such as LEGO, electronic housings and automotive bumper parts. PLA is a biodegradable (under the correct conditions) thermoplastic derived from renewable resources such as corn starch or sugarcane. It is one of the most popular bioplastics, used for many applications ranging from plastic cups to medical implants.

In general, the tolerances and accuracy of FDM printed components are largely dependent on printer calibration and model complexity. However, ABS and PLA can be used to create dimensionally accurate parts, printing details down to 0.8mm and minimum features down to 1.2mm. Due to its lower printing temperature, PLA, when properly cooled, is less likely to warp (making it easier to print with) and can print sharper corners and features compared to ABS.

With similar tensile strengths, ABS and PLA are both adequate for many prototyping applications, but ABS is often preferred due to its improved ductility over PLA and because of higher flexural strength and better elongation before breaking. The nature of printing with FDM means that for both ABS and PLA, the print layers will be visible after printing. ABS typically prints in a matte finish while PLA is semi-transparent, often resulting in a glossier finish. For high temperature applications, ABS (glass transition temperature of 105°C) is more suitable than PLA (glass transition temperature of 60°C). PLA can rapidly lose its structural integrity and can begin to droop and deform, particularly if under load, as it approaches 60°C [19]. The purpose of the printed model, the availability of consumables as well as the 3D printer limitations can also play an important role in the material selection. Further experimental research in real working conditions are planned for the definitive answer about a better choice of materials for the described application, i.e. involute gears.

3.4. Layer height

Layer height determines the thinness of each printed layer of the model. It is often treated as a measure of resolution in 3D printing, and consequently it is considered that the manufacturing accuracy largely depends on this, although it affects resolution only on the Z-axis (up and down).

Thinner layers will result in a smoother surface, but will also increase print times; layers take the same time to print regardless of height and thinner layers increase the total number of layers to be printed.

The preset layers heights for the printing of involute gear shown on Figure 2 were selected to be 0.1mm, 0.2mm and 0.3mm. Layers thicker than 0.3mm would be difficult to achieve because the extruded plastic noodle emerging from the nozzle is only 0.4mm in diameter. Layers thinner than 0.1mm are also possible to achieve but present additional challenges. When the distance between one layer and the next one approaches the height of the noodle, the two layers will not be pressed closely together and might not stick to each other very well [17]. For this reason there is a greater or lesser deviation in the thickness of the printed layer. In order to verify the accuracy of the printed models, their observation was performed by an optical microscope (Hirox 3D digital microscope KH 7700), Figure 7. The results of these analyses, which were carried out for the model which the nominal layer height of 0.1mm, are shown in the Figure 6. If a normal distribution law is assumed for the distribution of layer height parameter, for the results given in Figure 6, it can be concluded that the deviations of this parameter lie within the limits of ±7%, but also that the mean value is slightly higher than defined, and the same trend occurs for other models. A similar analysis was carried out for the other gears, where it was established that the largest deviation is 11.2%. The next considered component of the surface texture was its roughness. Surface roughness plays a major role in tribological characteristics of steel gears because better roughness leads to a better lubricating conditions. Regardless the fact that the analysed plastic involute gears will be tested in dry conditions, the idea was to check their roughness from the aspect of printing accuracy. The roughness measurements were made using the MarSurf SD 26 [20] with an arm probe BFW 250.

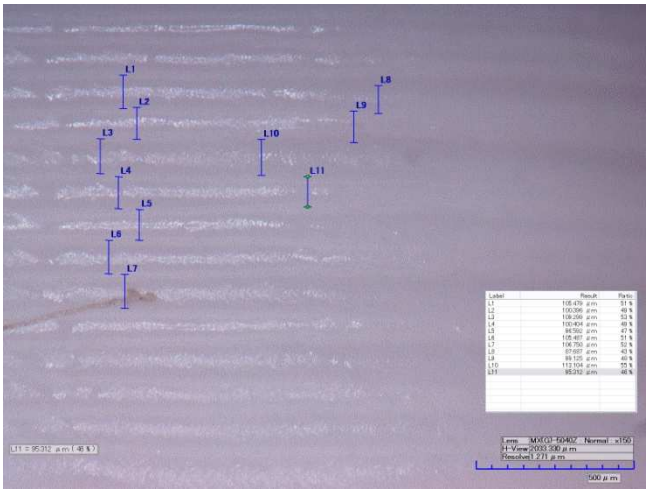

L1	105,479 µm	L6	105,487 µm
L2	100,396 µm	L7	106,750 µm
L3	109,299 µm	L8	87,687 µm
L4	100,404 µm	L9	99,175 µm
L5	96,952 µm	L10	113,104 µm
		L11	95,312 µm
L=101.790±7.174 µm			

Figure 6. Printed model surface roughness measurement results.

Figure 7. Layer height measurement.

The determination of surface roughness parameters for involute gears is regulated by standard [21]. Measuring directions, according to this standard, are determined based on the direction of the final machining process and the type of device used for measuring. For this case, two types of measurements were made, one in the direction of gear tooth involute and second in the direction of the gear tooth flank line, for all printed involute gears. The results of these measurements are given in the Figures 7, and 8, for the tooth flank line and involute direction, respectively.

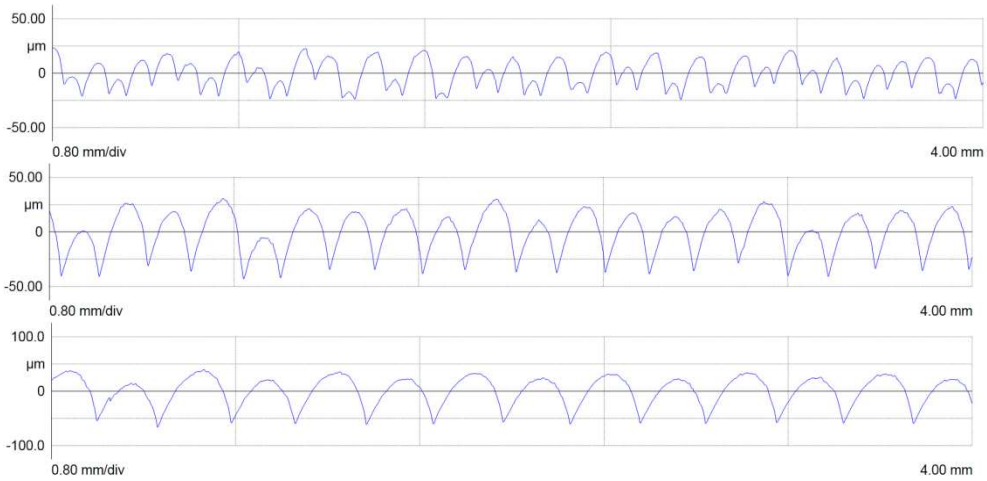

PLA 0.1mm	
Roughness parameter [µm]	
Ra	10.199
Rz	43.496
Rmax	46.394

PLA 0.2mm	
Roughness parameter	
Ra	15.178
Rz	66.916
Rmax	71.392

PLA 0.3mm	
Roughness parameter [µm]	
Ra	22.330
Rz	95.616
Rmax	105.26

Figure 8. Cylindrical gear tooth flank line direction roughness measurement.

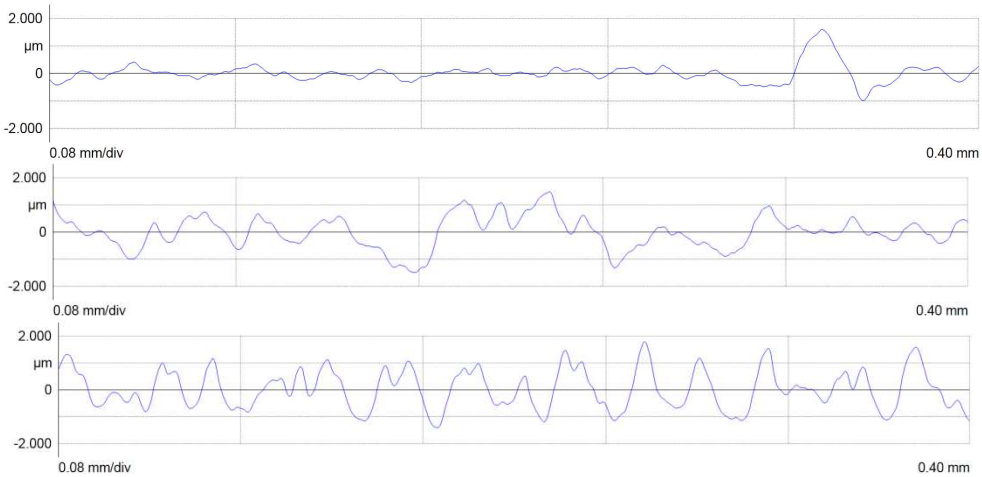

PLA 0.1mm	
Roughness parameter [µm]	
Ra	0.212
Rz	1.058
Rmax	20582

PLA 0.2mm	
Roughness parameter [µm]	
Ra	0.466
Rz	2.089
Rmax	2.874

PLA 0.3mm	
Roughness parameter [µm]	
Ra	0.603
Rz	2.590
Rmax	2.933

Figure 9. Cylindrical gear tooth involute direction roughness measurement.

It can be concluded that measurements performed in the direction of the gear tooth flank line can be used for the control of layer height. Since the measuring length for the evaluation of the roughness parameters was 4mm, depending on the height of the printing layer, this distance would be filled with a different number of layers. So, in the case of a layer height of 0.1mm, the number of layers that fill in the measurement length of 0.4mm can be counted, and is approximately 40 (Figure 8, top). The same goes for involute gears with a layer height of 0.2mm and 0.3mm (Figure 8, middle and bottom).

Since the preferred direction for roughness parameters determination is the one which is perpendicular to the direction of surface finishing process [21], this means that for this selected case of printing layers, the flank line measuring direction would be more valid for determining the roughness parameters. If a comparison with involute gears made of steel would be made, this would mean that roughness classes of printed teeth flanks correspond to the roughness class 11 or 12 (Ra=10…20µm for m<6mm). It should be kept in mind that these roughnesses were obtained immediately after printing, and that the printed involute gears were not subjected to any additional machining process. Measurements in the other direction, Figure 9, have given much less value to the roughness parameters, i.e. as expected the surface is much flatter in this direction.

4. Conclusion

In this paper, a review for the selection of printing parameters that were assumed to be of greatest importantance for the involute gears produced by FDM is given. The impact of each individual printing parameter on the load capacity of involute gears has not been sufficiently explored. For this reason, the continuation of this paper will deal with the study of the impact of printing parameters on the load capacity of printed involute gear teeth flanks. Experimental research, which will be carried out on back-to-back gear test rig, on printed involute gears which were described in this paper, will aim to determine the optimal printing parameters in terms of gears operational characteristics (strength, vibration, contact temperature), as well as the possibility of replacing steel gears with the ones made of various plastic materials – for certain applications, and for a certain time.

Acknowledgments

The authors would like to express their gratitude to the Slovak Research and Development Agency and to the Ministry of Education, Science and Technological Development of Republic of Serbia for the support of the bilateral project No. SK-SRB 2016-0054, as well as for the equipment used, which was acquired within the project TR35029.

References

[1] Jelaska D 2012 *Gear and gear drives*, John Wiley & Sons Ltd
[2] Ristivojevic M and Mitrovic R 2002 *Load Distribution – Gear Couples and Rolling Bearings*, Faculty of Mechanical Engineering in Belgrade
[3] Roesler J, Harders H and Baeker M 2007 *Mechanical Behaviour of Engineering Materials*, Springer-Verlag
[4] Krueger H 2017 Standardization for Additive Manufacturing in Aerospace, *Engineering* **3**(5) 585
[5] GE Reports website (Kellner T), *Fit to print: New Plant Will Assemble World's First Passenger Jet Engine with 3D printed Fuel Nozzles, Next-Gen Materials*, http://www.gereports.com/ (accessed on June 2016)
[6] Navrotsky V, Graichen A and Brodin H 2015 Industrialisation of 3D Printing (Additive Manufacturing) for Gas Turbine Components Repair and Manufacturing, *VGB PowerTech* **12** 49-52
[7] Dimic A, Miskovic Z, Jelovac D, Mitrovic R, Ristivojevic M and Majstorovic M 2017 Application of Rapid Prototyping in Maxillofacial Surgery, *Machine Design* **2**(3) 87-92
[8] Letcher T, Rankouhi B and Javadpour S 2015 *Experimental Study of Mechanical Properties of Additively Manufactured ABS Plastic as a Function of Layer Parameters*, ASME International Mechanical Engineering Congress and Exposition, Houston, Texas, November 13-19, pp. 1-8
[9] Attaran M 2017 The Rise of 3-D printing: The Advantages of Additive Manufacturing Over Traditional Manufacturing, *Business Horizons* **60** 677-688
[10] Ford S and Despeisse M 2016 Additive Manufacturing and Sustainability: an Exploratory Study of the Advantages and Challenges, *Journal of Cleaner Production* **137** 1573-1587
[11] Prakash K S, Nancharain T and Subba Rao V V 2017, *Additive Manufacturing Techniques in Manufacturing – An Overview*, 7th International Conference on Materials Processing and Characterization, Hyderabad, India, March 17-19, pp. 3873-3882
[12] Adams C E 1986 *Plastic Gearing: Selection and Application*, Marcel Dekker
[13] Additive Manufacturing, *NanoSteel Launches 3D Printable Tool Steel*, http://additivemanufacturing.com/ (accessed on March 2018)
[14] 3Dhubs, *What is 3D Printing? The Definitive Guide to Additive Manufacturing*, https://www.3dhubs.com/ (accessed on March 2018)
[15] Davis J R and associates 2005 *Gear Materials, Properties and Manufacture*, ASM International
[16] Umaras E and Tsuzuki M S G 2017, Additive Manufacturing – Considerations on Geometric Accuracy and Factors of Influence, *IFAC PapersOnLine* **50**(1) 14940-14945
[17] MakerBot, *Replicator 2X–Experimental 3D printer*, User Manual, http://downloads.makerbot.com (accessed on March 2018)
[18] Perez A R T, Roberson D A and Wicker R B 2014 Fracture Surface Analysis of 3D-Printed Tensile Specimens of Novel ABS-Based Materials, *Journal of Failure Analysis and Prevention* **14**(3) 343-353
[19] 3Dhubs, *PLA vs. ABS: What's the Difference?* https://www.3dhubs.com/ (accessed on March 2018)
[20] MARSURF, *PC-based Mobile Surface Measuring Stations*, User manual
[21] ISO TR10064-3 1996, *Cylidnrical Gears – Code of Inspection Practice – Part 3: Recommendations Relative to Gear Blanks, Shaft Centre Distance and Parallelism of Axes*