Developing a MATLAB model for flat solar collectors

I Péter Szabó[1], S Csikós[1] and J Sárosi[1]

[1]University of Szeged, Faculty of Engineering, Department of Technology Moszkvai körút 9, 6729 Szeged, Hungary

E-mail: pszi@mk.u-szeged.hu

Abstract. At the University of Szeged Faculty of Engineering we design solar collectors since 2005. For the tests of our collectors and for other researches about collectors we designed a measuring equipment which is capable for measuring the efficiency as the function of the specific solar irradiation and the temperature difference between the collector and the ambient air. The temperature different between the collector and the ambient air in our system is well-controlled with the fan coil which transfers the heat from the collectors to the ambient air. With this construction we can change the temperature of the fluid at the intake of the collectors and simulating transient effects. By the data loggers we have registered the values every 5 seconds. The calculation of the instantaneous efficiency of solar collector is conditioned. Based on the results of the measurements the MATLAB model of the analysed solar collectors is developed. During the design of a flat solar collector with this model the function of the efficiency could be pre-calculated.

1. Introduction

The function of efficiency of a solar collector generally depends on many parameters. For a specific type of collector these parameters are fixed. According to accepted practice in scientific research institutes the function of efficiency of the analyzed solar collector has two independent variables, namely:

– intensity of solar irradiation (G, Wm^{-2}),

– temperature difference between the collector and the ambient air (t_{coll}-t_{air}, °C).

Under real operating conditions, a collector/absorber has radiative, conductive and convective heat losses. These losses are zero at t = 0 when the liquid is at ambient temperature and increase with time as the temperature of the liquid increases [1]. The typical heat losses of a flat solar collector are represented in Figure 1:

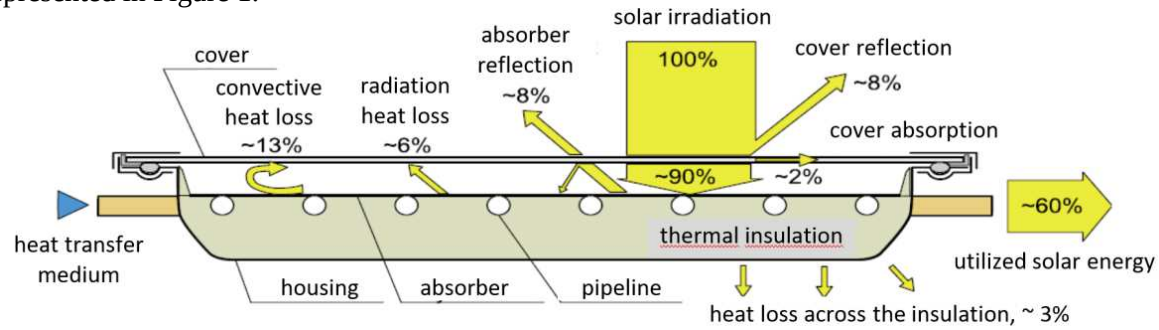

Figure 1. Typical heat losses of a flat solar collector [2].

Content from this work may be used under the terms of the Creative Commons Attribution 3.0 licence. Any further distribution of this work must maintain attribution to the author(s) and the title of the work, journal citation and DOI.
Published under licence by IOP Publishing Ltd

Figure 1 shows well that the efficiency is affected by:
- light transmission and thermal insulation capability of the cover,
- the heat absorbing ability of the absorber surface,
- the geometrical design and connection of the absorber surface and the pipeline,
- the thermal insulation of the collector house.

Based on the above losses, the thermal network model of the flat solar collector can be created.

2. Material and method

For our research we developed the experimental device represented in Figure 2. With the device the function of efficiency of the collector was determined at the maximum range of the two independent variables: the intensity of the solar irradiation and the reduced temperature difference.

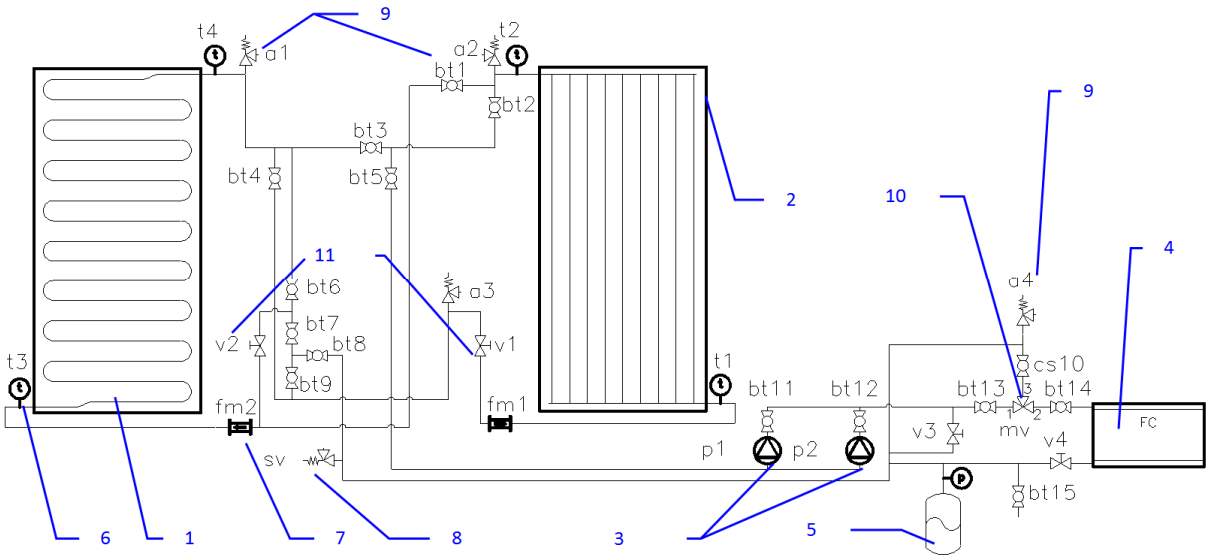

Figure 2. Experimental measuring and data logging device for the determination of the function of efficiency of solar collectors: 1 – solar collector with single pipe absorber (SP), 2 – solar collector with parallel pipes (PP), 3 – circulation pumps (p1: regulated, p2: unregulated), 4 – fan coil, 5 – expansion tank, 6 – thermometers (t1 – t2 – t3 – t4), 7 – flow meters, 8 – safety pressure relief valve, 9 – deaerators (a1 – a4), 10 – motorized valve for cooling capacity control (mv), 11 – choking valves for volume flow rate adjustment (v1, v2), bt1 – bt14: ball taps for setting the circuit, bt15: filler tap.

With the device the measurements can be made in natural operating conditions, without using artificial light, so the intensity of irradiation is not controlled. The other variable the temperature difference from the ambient air is controlled well with the fan coil (4) connected to the system and through which the heat output of the collectors goes to the ambient air. The number of revolutions on the fan coil is continuously adjustable and with a bypass and an adjusting valve can be further reduced. The fan coil can be excluded from the circuit. With this solution the temperature at the fluid inlet of the collectors is controllable: decreasing the cooling capacity of the fan coil the fluid temperature increases at the inlet. It allows fast changes of the temperature difference between the collectors and the ambient air. With the device the collectors can be analyzed in serial and parallel connection.

3. Mathematical model of the flat solar collector

We simulated our experimental solar collector with Kolektor 2.2 software, and we made a mathematical model with Matlab.

3.1. Modeling with Kolektor 2.2 software

As a first step, we analyzed the efficiency of the experimental solar collector with Kolektor 2.2 software developed by Tomas Matuska, Vladimir Zmrhal and Juliane Metzger [3] [4].

The operating parameters set in the software were as follows:

- specific mass flow of the fluid: 0.01 $kg \cdot s^{-1} \cdot m^{-2}$,
- global solar irradiation intensity: 800 $W \cdot m^{-2}$,
- ambient temperature: 20 °C,
- tilt angle: 45°.

Physical properties of the experimental collector:

- width: 1 m,
- height: 2 m,
- air gap between the absorber and the cover: 20 mm,
- air gap between the absorber and the thermal insulation: 2 mm,
- absorber material: copper,
- thickness of the absorber plate: 1 mm,
- inner and outer diameter of the pipelines: 15 mm and 13 mm,
- fluid: propylene glycol,
- thickness of the cover 10 mm, heat resistance: 0.323 m^2KW^{-1} (cellular polycarbonate sheet)
- air pressure in the collector: 100 kPa, the collector does not contain charging gas.

The software examines the operation of the collector by the thermal network model. The result of the simulation is represented in Figure 3:

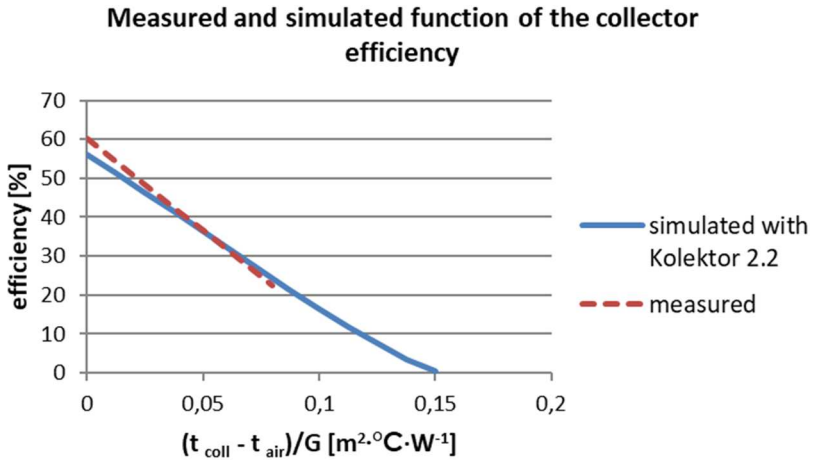

Figure 3. Measured and simulated function of efficiency of the experimental solar collector.

3.2. Modeling with Matlab

With Matlab we have developed a mathematical model to simulate the operation of the collector. We used the Simulink [5], Thermal and Thermal Liquid modules. Figure 4 and Figure 5 represents the block diagram of the model.

The diagram of the model made with Matlab simulates the operation of the collector as a thermal network according to the prescribed operating parameters. The intensity of the solar irradiation (1) is adjustable, in accordance with the light transmission capability of the cover the reduced radiation intensity reaches the absorber, a proportion proper to the light-absorbing ability (3) heats the cover (4), the cover reflects the remaining amount. The radiative heat flux reached the absorber (5) is particularly reflected to the cover (6), another part reaches the cover in a convective way (7) from the warm absorber, the third part goes to the heat insulation as a conductive heat flux (9). The remaining part of the absorbed heat flux (10) reaches the flowing fluid in the piping of the absorber. The temperature of

the fluid inlet (11) and the ambient air (12) are adjustable. The average of the temperature of the fluid outlet (13) and inlet and the intensity of the solar irradiation determine the reduced temperature difference (14). The efficiency (15) is the ratio of the intensity of the solar irradiation (1) and the heat flux from the absorber to the fluid (10).

Changing the values of the intensity of solar irradiation (1) the temperature of the ambient air (12) and the fluid inlet (11), the fluid flow rate with the pump (16) in any operating status we can calculate the efficiency, so the function of the efficiency is determined. Figure 6 represents the results of the simulation. With the model we have analyzed the components of the heat loss (Table 1). Figure 7 shows the results of the simulation in function of the reduced temperature difference.

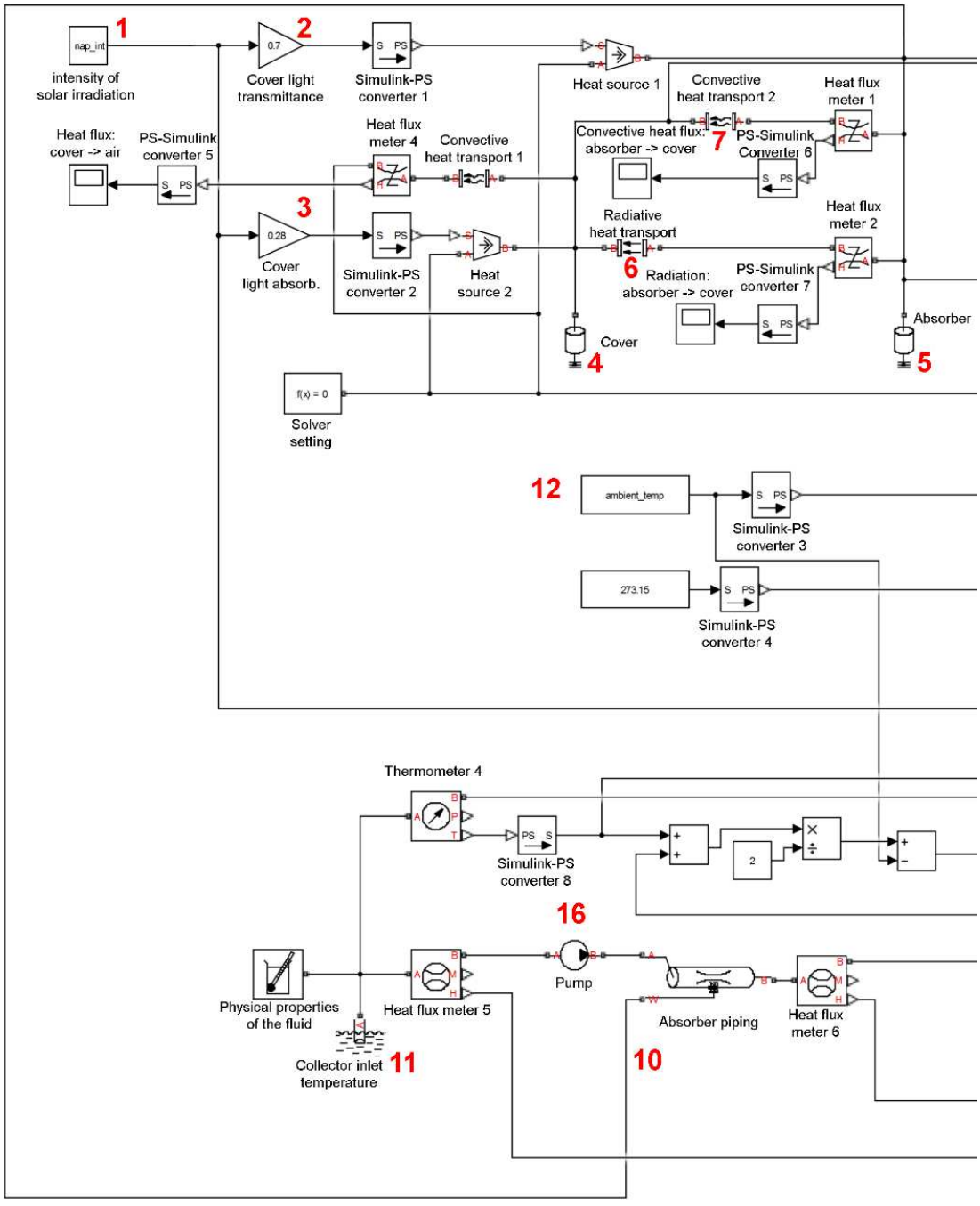

Figure 4. Matlab diagram of the mathematical model of the collector, part one.

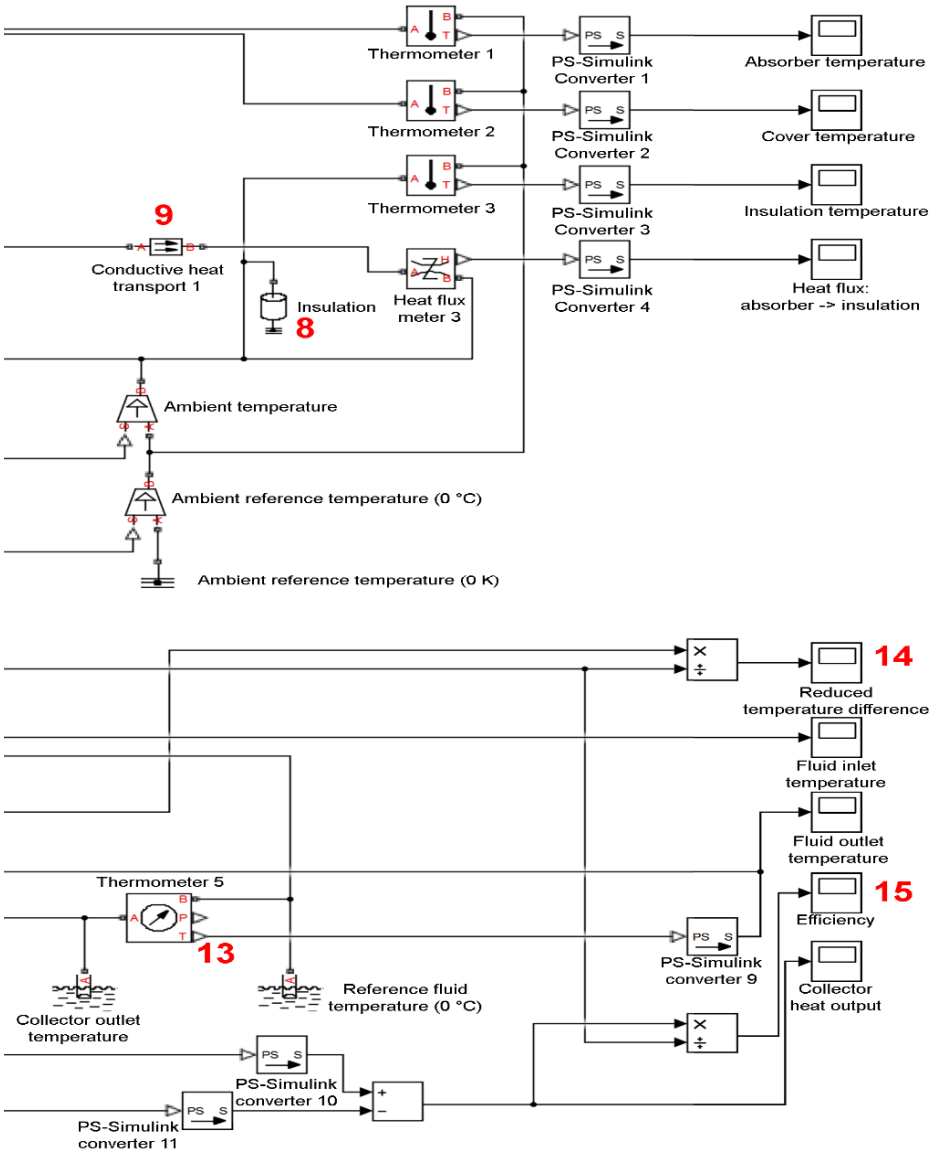

Figure 5. Matlab diagram of the mathematical model of the collector, part two.

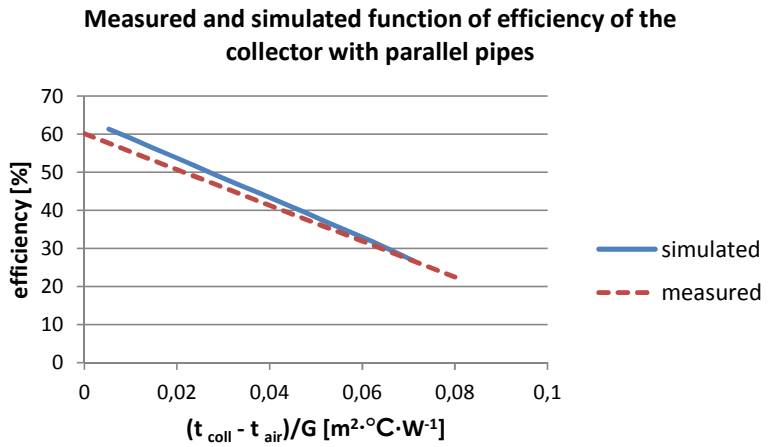

Figure 6. Measured and simulated function of the efficiency of the collector with parallel pipes.

Table 1. Results of the simulation with Matlab.

Collector inlet temperature t_{in} [°C]	Reduced temperature difference G [Km^2W^{-1}]	Collector efficiency □[%]	Heat flow from absorber to insulation [W]	Radiated heat loss of the cover [W]	Convective heat loss from absorber to cover[W]
20	0.0053	61.3	27	8.37	51.2
25	0.01	58.9	33.45	11.14	66.6
30	0.01475	56.46	39.57	14	81.8
35	0.0194	54	45.7	17	97.25
40	0.024	51.6	51.8	20	112.5
45	0.02885	49.1	58	23.35	127.9
50	0.03358	46.6	64.1	26.71	143.3
55	0.0383	44.22	70	30	158
60	0.043	41.82	75.9	33.53	172.6
65	0.0477	39.4	81.75	37.05	187.3
70	0.0524	36.9	87.7	40.9	202.2
75	0.0572	34.4	93.725	44.93	217.2
80	0.062	31.9	99.75	48.96	232.2
85	0.0665	29.35	105.875	53.34	247.4
90	0.071	26.8	112	57.72	262.6

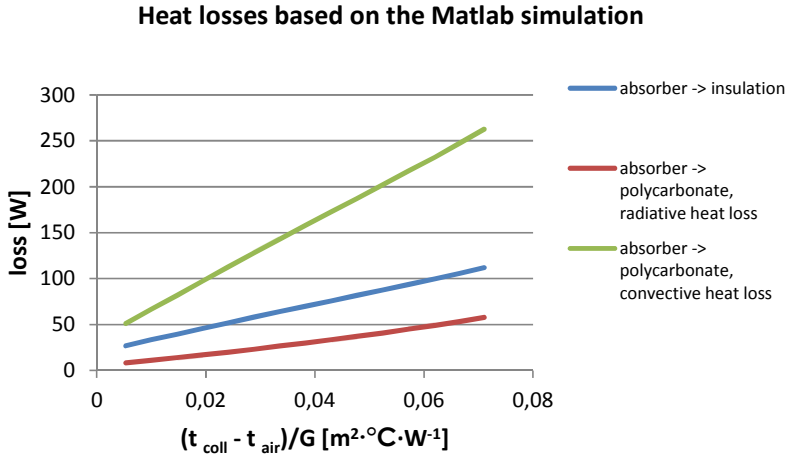

Figure 7. Heat losses of the absorber in function of the reduced temperature difference.

The diagram does not include the loss according to the light transmission capability of the cover. The optical efficiency of the collector with parallel pipes is 60.12 % (Figure 3), it causes 399 W heat loss at the 1000 Wm^{-2} intensity of solar irradiation of the simulation. For the experimental solar collector it is established that the largest heat loss is the part of the solar irradiation that absorbed and reflected by the cover. The next one is the convective heat flux from the absorber to the cover, the third one is the conductive heat loss through the thermal insulation at the back, than the radiated heat flux from the absorber to the polycarbonate cover.

From the results of the modeling it is established that during the further researches more types of polycarbonate sheet, solar glass and insulated glass should be modeled for the cover, and applying these covers the function of the efficiency for the modified collector should be measured.

4. Conclusion

The mathematical model of our experimental flat collector was developed and validated. With this model the components of the heat loss could be calculated. By these calculations we found that the

most important component of the collector's loss is the amount of heat that absorbed and reflected by the coating. The model can be used to determine further changes to the collector to achieve better efficiency. By the physical properties the model can determine the function of efficiency and the the proportion of the components of the loss, so it could be a useful tool for developing other flat solar collectors.

References

[1] Nijegodorov N and Jain P K 1996 A Graphical Method of Measuring the Performance Characteristics of Solar Collectors, *Renewable Energy* **7**(1) 23-31
[2] Naplopó K 2008 Napenergia-hasznosítás tervezési segédlet, http://naplopo.hu/letoltes/naplopo-tervezesi-segedlet.pdf (accessed on February 2018)
[3] http://users.fs.cvut.cz/tomas.matuska/wordpress/wp-content/uploads/2015/02/kolektor22.zip (accessed on February 2018)
[4] http://users.fs.cvut.cz/tomas.matuska/wordpress/wp-content/uploads/2015/02/matuska_solnet_collectors.pdf (accessed on Feb. 2018)
[5] https://uk.mathworks.com/products/simulink.html?s_tid=hp_products_simulink (accessed on February 2018)