Studying hardness, workability and minimum bending radius in selectively laser-sintered Ti–6Al–4V alloy samples

N V Galkina, Y A Nosova, A V Balyakin

Samara University, 34, Moskovskoye shosse, Samara, 443086, Russia

E-mail: nata12_92@mail.ru

Abstract. This research is relevant as it tries to improve the mechanical and service performance of the Ti–6Al–4V titanium alloy obtained by selective laser sintering. For that purpose, sintered samples were annealed at 750 and 850°C for an hour. Sintered and annealed samples were tested for hardness, workability and microstructure. It was found that incomplete annealing of selectively laser-sintered Ti–6Al–4V samples results in an insignificant reduction in hardness and ductility. Sintered and incompletely annealed samples had a hardness of 32..33 HRC, which is lower than the value of annealed parts specified in standards. Complete annealing at temperature 850°C reduces the hardness to 25 HRC and ductility by 15...20%. Incomplete annealing lowers the ductility factor from 0.08 to 0.06. Complete annealing lowers that value to 0.025. Complete annealing probably results in the embrittlement of sintered samples, perhaps due to their oxidation and hydrogenation in the air. Optical metallography showed lateral fractures in both sintered and annealed samples, which might be the reason why they had lower hardness and ductility.

1. Introduction

Titan alloys are widely used in aerospace industry due to their mechanical and service characteristics, as they feature high specific strength, low density, and high corrosion resistance [1-6]. However, the traditional process of making complex structural components of titanium alloys is expensive and labor-intensive. Alternative methods such as selective laser sintering, electron-ray melting, and selective laser melting (SLM) have come into wide use in recent years. These methods are of interest to technologists and researchers [7-10]. Each of them has its own advantages and disadvantages [11]. Selective laser sintering can make products of various shapes; however, it has very strict granulometric requirements to powder. Electron-ray melting can use standard workpieces (wires) and consumes very high amounts of energy per unit of production. Besides, none of those methods can be used to make products below a certain size threshold. Thus, products made by indexed ways cannot have a section of less than 1.5 mm, and a rounding radius of less than 2 mm [12]. Taking into account such factors as workability, geometric flexibility, and the affordability of required machinery, SLM seems to be the best method for the additive manufacturing of high-quality complex products, including coatings and layered composites. Compared to conventional technologies, SLM offers a wide range of advantages, including a shorter market entry period, does not need expensive stamps, direct out-of-the CAD manufacturing, high flexibility, etc. [13].

Cold bending enables precise calibration of sintered products and quality of coatings and layered composites. However, sintered parts should have high ductility values [14]: a minimum spring-back

angle and bending radius, low hardness. Larger spring-back angles should be taken into account when designing the stamp. Low ductility of sintered parts, layers and coatings could lead to delamination of the structure. Due to the abundance of structural defects in the samples and obtained parts (the porosity, oversaturation with the alloying elements of solid solutions), the mechanical properties were lower compared to compact samples and products, which necessitated annealing [15]. Recommended thermal treatment parameters were taken from reference books [16]. As a rule, annealing results in lower strength and higher plasticity; however, annealing of sintered samples may as well redistribute residual tensions and alter the geometric dimensions of the part, which is highly undesirable. This research was aimed to find out how the sample condition (sintered or annealed) affects its hardness, minimum bending radius, and workability.

2. Materials and methods

Samples of sizes 2x10x30 mm were selectively sintered from titanium alloy Ti–6Al–4V. Then these samples were annealed for an hour at 750 ºC and 850 ºC.

After thermal treatment, the samples were bend-tested using a tool stamp, with an apical angle of 90º and a rounding radius of 10 mm (scheme is shown in Figure 1).

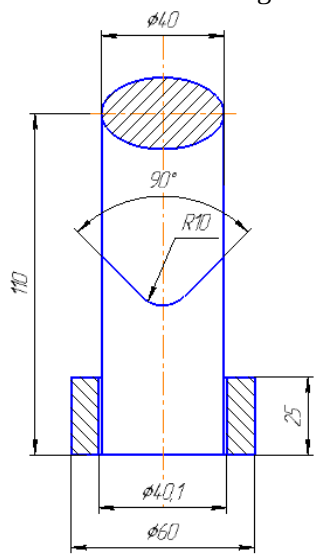

Figure 1. Scheme of instrumental die

Ductility was calculated using the way described in [17] by the formula:

$$d = \frac{H_{aver}}{l_H}$$

where H_{aver} - an average height of the curvilinear isosceles triangle;

l_H - a neutral layer length. All measurements were conducted using KOMPAS Software.

Microetches were then produced from the samples. Etching was done as follows: 180 ml H_2O, 180 ml HCl, 120 ml HNO_3, 30 ml HF. Etching durance was 1 - 2 minutes; the samples were then washed with water and dried with filter paper. The post-etching microstructure was analyzed using the metallographic toolmaker microscope METAM LV-32. Hardness was evaluated by Rockwell method.

3. Results and discussion

Figure 2 shows the effect of annealing temperature on the hardness of the sintered alloys.

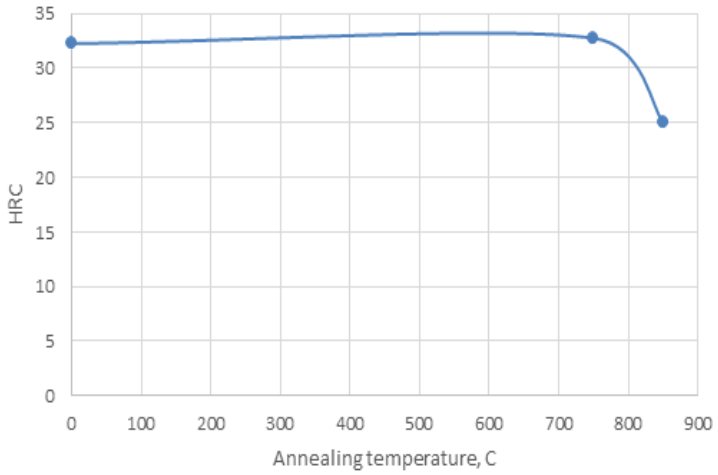

Figure 2. Dependence of hardness on annealing temperature

As can be seen in Figure 2, hardness remains rather high after incomplete annealing at 750ºC, but is reduced after a complete annealing at 850ºC. However, at the lower standardized post-annealing threshold, a Ti–6Al–4V rod should be preserved (26 to 41 HRC). Thus, sintered samples were within the standardized values.

By measuring the altitudes of the curvilinear isosceles triangle, the authors calculated the ductility factor for each sample. As a result, they built a dependency of the factor on the annealing temperature for the Ti–6Al–4V titanium alloy (Figure 3).

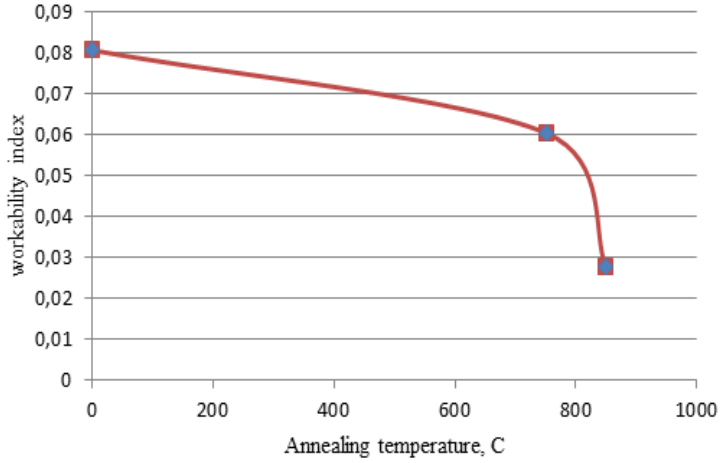

Figure 3. Chart of dependence of workability index on annealing

As can be seen in Figure 3, the higher the annealing temperature, the lower the workability index.

4. Microstructure

Figures 4 to 6 present the microstructures of the sintered samples.

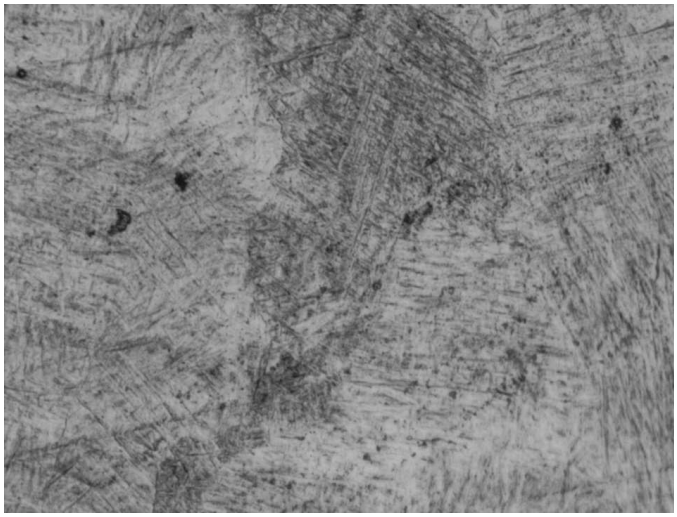

Figure 4. Microstructure of sintered sample of Ti–6Al–4V alloy, x500

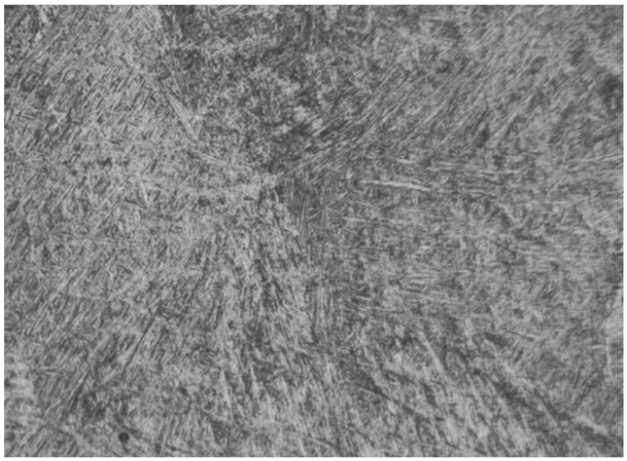

Figure 5. Microstructure of sintered and annealed at 750°C sample, x500

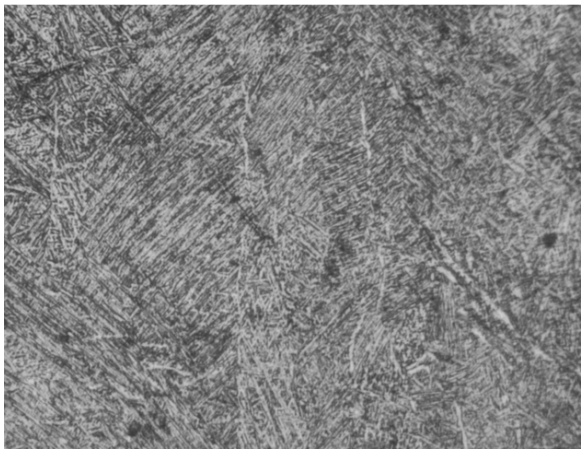

Figure 6. Microstructure of sintered and annealed at 850°C sample of Ti–6Al–4V alloy, x500

The post-sintered structure features incomplete fusions and includes rounded impurities approx. 40 μm in size, which matches the average granulometric composition of the source powder. Samples annealed at 750°C for an hour had 150...200 μm long, 0.3...0.5 μm wide lateral fractures. These fractures were smaller in completely annealed samples. The phase composition of samples shows inhomogeneity in size of α and β phases of the grain size (figure 4). After incomplete annealing, the phase composition becomes more homogeneous (figure 5) in comparison to the sintered initial structure. Complete annealing leads to the most homogeneous size and distribution of phases. These structure transformations should result in the increase of ductility, workability [12]. But the authors observed the opposite state.

Therefore, structural alterations do not explain why samples have their hardness and ductility altered by annealing. The reduction in hardness might be due to the greater structural equilibrium that is conditioned by phase recrystallization. In case of incomplete annealing (750°C), incomplete phase recrystallization results in partial elimination of internal tensions, but only in the α-structure. Complete annealing results in double phase re-crystallization in both structures, which greatly reduces the hardness of samples annealed at 850°C. Deforming and cutting tools treated that way display lesser wear [18].

The reduction in hardness is accompanied by a reduction in ductility, which might be due to the superficial hydrogen saturation; samples shall be annealed in the air.

5. Conclusions

1. Incomplete annealing of selectively laser-sintered Ti–6Al–4V samples results in an insignificant reduction in hardness and ductility.
2. Complete annealing at that temperature may reduce the hardness to 25 HRC and ductility by 15...20%.
3. Optical metallography has revealed lateral fractures at intervals of 40...50 μm both in sintered and in annealed samples. Annealing results in growth of homogeneity in size and distribution of phases.

6. Acknowledgments

These studies were conducted using the equipment of CAM technology center of common use (RFMEFI59314X0003). This work was supported by the Ministry of Education and Science of the Russian Federation in the framework of the implementation of the Program "Research and development on priority directions of scientific-technological complex of Russia for 2014-2020"

References

[1] Jian-wei X U, Zeng Wei-dong, SUN Xin, JIA Zhi-qiang 2015 Microstructure evolution during isothermal forging and subsequent heat treatment of Ti-17 alloy with a lamellar colony structure *Journal of Alloys and Compounds* **637** 449−455

[2] Lee W S, Lin Chi-feng 1998 Plastic deformation and fracture behavior of Ti−6Al−4V alloy loaded with high strain rate under various temperatures *Materials Science and Engineering* **241** 48−59

[3] Smirnov G V, Pronichev N D, Nekhoroshev M V, Bogdanovich V I 2017 Experimental and theoretical study of the hydriding behaviour in the pulse ecm of titanium alloys *IOP Conference Series: Materials Science and Engineering* **177**

[4] Smirnov G V, Pronichev N D, Nekhoroshev M V 2017 Effect of technological heredity on the fatigue strength in the manufacture of gas turbine engine blades *IOP Conference Series: Materials Science and Engineering* **177**

[5] Jayabthi P, Binil S, Shivakumar R, Andy C 2010 Mechanical evaluation of porous titanium (Ti6Al4V) structures with electron beam melting (EBM) *Journal of the Mechanical behavior of Biomedical Materials* **3** 249−259

[6] Hai-shui R, Xiang-jun T, Dong L, Jian L, Hua-ming W 2015 Microstructural evolution and mechanical properties of laser melting deposited Ti−6.5Al−3.5Mo−1.5Zr−0.3Si titanium alloy *Transactions of Nonferrous Metals Society of China* **25** 1856−1864

[7] KRUTH J P, MERCELIS P, VAN V J, FROYEN L, ROMBOUTS M. 2005 Binding mechanisms in selective laser sintering and selective laser melting *Rapid Prototyping Journal* **11** 26−36

[8] GORNY B, NIENDORF T, LACKMANN J, THÖNE M, TRÖSTER T, MAIER H J. 2011 In situ characterization of the deformation and failure behaviour of non-stochastic porous structures processed by selective laser melting *Materials Science and Engineering* **528** 7962−7967

[9] Yanyukina M. V., Pechenin V. A., Bolotov M. A. Optimization of measurements of the geometry of parts with complex surfaces *Measurement Techniques* **58 (3)** 261-268

[10] Tao FU, Hong-wei LI, Jian-min SUN, Gang LI, Wen LI, Hong-mei ZHANG 2015 Facile hydrothermal synthesis of TiO2−CaP nano-films on Ti6Al4V alloy *Transactions of Nonferrous Metals Society of China* **25** 1122−1127

[11] Smelov V G, Sotov A V, Agapovichev A V 2016 Study of structures and mechanical properties of products manufactured via selective laser sintering of 316L steel powder **9** 61-65

[12] Khaimovich A I, Balaykin A V 2014 Analysis of titanium alloys plastic properties under severe deformation conditions in machining *ARPN Journal of Engineering and Applied Sciences* **9** 1828-1833
[13] THIJS L, VERHAEGHE F, CRAEGHS T, VAN H J, KRUTH J P.2010 A study of the micro structural evolution during selective laser melting of Ti−6Al−4V *Acta Materialia* **58** 3303−3312
[14] Grechnikov F V, Khaimovich A I Raising the fatigue resistance of titanium alloys by high-speed deformation in the range of polymorphic transformations *Metal Science and Heat Treatment* **57(11-12)** 726-730
[15] Balaykin A V, Nosova E A and Galkina N V 2017 The Study of the Ageing Impact on Workability and Hardness of the Samples Made of Alloy VV751P (Ni-15Co-10Cr) after Selective Laser Sintering *Key Engineering Materials* **746** 192-197
[16] Arzamasov B N, Sidorin I I, Kosolapov G F 1986 Materials Science: Textbook for technical colleges and universities (Machine Building Publishers, Moscow)
[17] Galkina N V, Nosova E A and Balaykin A V 2017 Study of the impact of treatment modes on hardness, deformability and microstructure of VT6 (Ti–6Al–4V) and VV751P (Ni-15Co-10Cr) alloy samples after selective laser sintering *MATEC Web of Conferences* **129**
[18] Huang T.-H., Jiang C.-P., Grechnikov F., Erisov Y 2017 Effect of annealing treatment on die filling rate of mini gear in squeezing forming process *Key Engineering Materials* **746** 108-113