IOP Conf. Series: Materials Science and Engineering **148** (2016) 012069 doi:10.1088/1757-899X/148/1/012069

Analysis of optimisation method for a two-stroke piston ring using the Finite Element Method and the Simulated Annealing Method

M Kaliszewski[1] and P Mazuro[2]
[1] Former student of Warsaw University of Technology
[2] Assistant professor in Institute of Heat Engineering in WUT

E-mail: markaliszewski@gmail.com, pawel.mazuro@itc.pw.edu.pl

Abstract. Simulated Annealing Method of optimisation for the sealing piston ring geometry is tested. The aim of optimisation is to develop ring geometry which would exert demanded pressure on a cylinder just while being bended to fit the cylinder. Method of FEM analysis of an arbitrary piston ring geometry is applied in an ANSYS software. The demanded pressure function (basing on formulae presented by A. Iskra) as well as objective function are introduced. Geometry definition constructed by polynomials in radial coordinate system is delivered and discussed. Possible application of Simulated Annealing Method in a piston ring optimisation task is proposed and visualised. Difficulties leading to possible lack of convergence of optimisation are presented. An example of an unsuccessful optimisation performed in APDL is discussed. Possible line of further optimisation improvement is proposed.

1. Introduction

Piston ring discussed in the paper is designed in order to seal combustion space in a two-stroke barrel engine developed in The Faculty of Power and Aeronautical Engineering of Warsaw University of Technology. The aim of the paper is to analyse possible use of Simulated Annealing Method for the purpose of optimisation for the mentioned piston ring. Since optimisation did not bring a positive result, the outcome data is presented and some of improvement methods are suggested.

The radius of a cylinder associated to the ring is ϕ55mm. It was decided to use conical shape piston ring of 15’ to 30’ inclination and a rectangular gap. Its conical shape role is to allow for faster lapping process. Titanium alloy was chosen for a ring material. Ring properties are briefly described in table 1.

Table 1. Ring properties

Width	g	2.5 mm
Depth	h	1 mm
Deflected ring diameter	D	55 mm
Young’s modulus	E	625 GPa
Poisson ratio	υ	0.21
Bending strength	k	1.6 GPa

Content from this work may be used under the terms of the Creative Commons Attribution 3.0 licence. Any further distribution of this work must maintain attribution to the author(s) and the title of the work, journal citation and DOI.
Published under licence by IOP Publishing Ltd

Hence the piston is allowed to rotate freely in a cylinder due to its assembly there is no need for constraining piston ring to its piston. In a side wall of the cylinders the inlet and outer holes are present. Their presence significantly influences the rings wearing. Especially their butt ends are exposed to collide with holes edges, which is the reason why ring pressure on a cylinder wall has to be reduced at its ends [1].

Nowadays, two leading methods of determining demanded undeflected ring shapes dominate in the literature. First of them is purely analytical method described by Kozaczewski [2]. It is based on Euler–Bernoulli beam theory assuming small deflections of a ring and possibility of pressure distribution transformation into a Fourier series. Another one is a discrete method presented by Iskra [3]. The method basically approximates ring deflection by its discretisation into the set of finite number of infinitely stiff beams attached to each other by deflectable pins. The pins stiffness is computed basing on Young modulus and cross-section moment of inertia of a ring.

2. Aim of optimization

The main goal of optimization is to determine free shape of a piston ring, which would exert demanded pressure on a cylinder just while being bended to fit the cylinder. For the two-stroke piston engine function of demanded rings pressure is a constant value (p_N = 0.2 MPa) along a whole circumference of a ring excepting its ends. During 5° nearest to ring ends, pressure should drop to the value between 0 - 20% of a nominal pressure (p_E = 0÷0.04 MPa) as it is described in a figure 1. However, it is not possible to obtain this value since such pressure distribution does not fulfil static equilibrium condition because there occurs a resulting force heading in the right direction. For that reason it was decided to use another function based on a Fourier Series [3]. It may be defined by the equations (1-4) and is described in a figure 2. In fact, the mentioned equations still do not fulfil equilibrium condition perfectly due to a presence of a gap between ring ends, however unbalanced force drops by 98.4% (from R_x=0.89N to R_x=0.014N).

$$\mathrm{p_{opt}}(\theta) = \mathrm{p_0} + \sum_{\mathrm{n=1}}^{\mathrm{N}} \left(\mathrm{p}_n \cos(n\theta)\right) \tag{1}$$

$$\mathrm{p_0} = \mathrm{p_N} \tag{2}$$

$$\mathrm{p_1} = 0 \tag{3}$$

$$\mathrm{p_n} = 2\left(\mathrm{p_N} - \mathrm{p_E}\right)(\mathrm{N}-1)^{-1}[1-(\mathrm{i}-1)\mathrm{N}^{-1}] \tag{4}$$

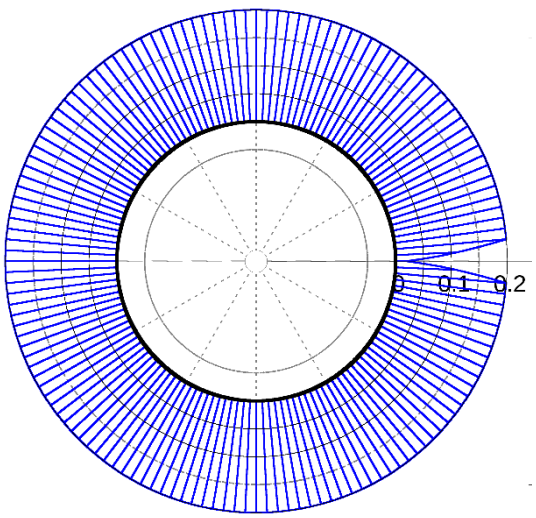

Figure 1. Demanded pressure distribution by formula suggested by Iskra [3].

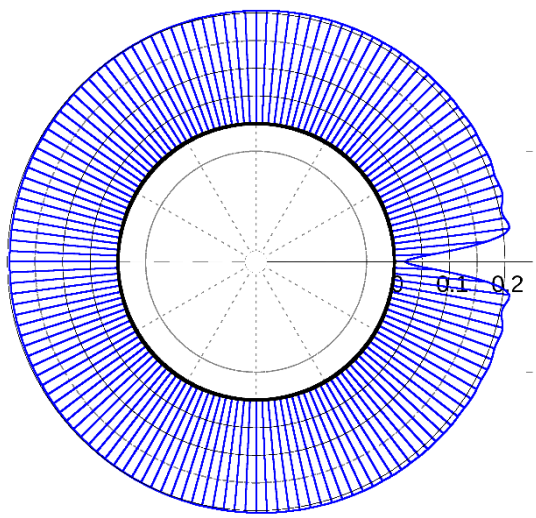

Figure 2. Pressure distribution for N = 44.

2.1. Objective function

The objective function is divided into two subfunctions. First of them is defined by (5) and it is a measure of how close the pressure along a circumference ($\mathrm{p}(\theta)$) is to desired pressure. Second of them is defined by (6) and it indicates how close the pressure at the ring end is close to a demanded value. The general objective function is defined simply by adding both together.

$$\mathrm{F_N} = \int_{-\theta_k}^{\theta_k} \left| p(\theta) - \mathrm{p_{opt}}(\theta) \right| \mathrm{d}\theta \cdot \left(\int_{-\theta_k}^{\theta_k} \left| \mathrm{p_{opt}}(\theta) \right| \mathrm{d}\theta \right)^{-1} \tag{5}$$

$$\mathrm{F_E} = \left| p(\theta_k) - \mathrm{p_E} \right| \cdot \left(\mathrm{p_E} \right)^{-1} \tag{6}$$

Pressure distribution for an arbitrary geometry of the ring is determined via FEM contact simulation with no friction and no separation. Contact simulation as general algorithm was performed in ANSYS software by APDL. Due to the simple geometry of a ring it was modelled as 2D case in plane stress state with a symmetry boundary condition applied to the centre of a ring. All elements of a ring were PLANE182 quadrilateral elements as shown in a figure 3. Contact simulation was chosen to be no separation contact with penetration tolerance of constant value of 10^{-5} due to its speed and acceptable accuracy. Also an option of large displacement solution with maximum number of 10 substeps was chosen. In this kind of simulation it is possible to obtain as well positive as negative values of contact pressures. It is not physical, however it makes simulation more sensitive than separation contact simulation since for the same geometry negative pressures returns higher objective function.

Contact pressure distribution is being computed using APDL commands via reading nodal forces and dividing them by associated areas computed by equations (7-8). In those equations l_i and l_{i+1} stands for length along cylinder circumference of nearest node elements after being deflected by a contact simulation. For first and last node l_i and l_{i+1} were substituted by zeros respectively, because they are associated with only one element.

$$p_i = F_i \cdot A_i^{-1} \tag{7}$$

$$A_i = (l_i - l_{i+1}) \cdot \mathrm{h} \cdot 2^{-1} \tag{8}$$

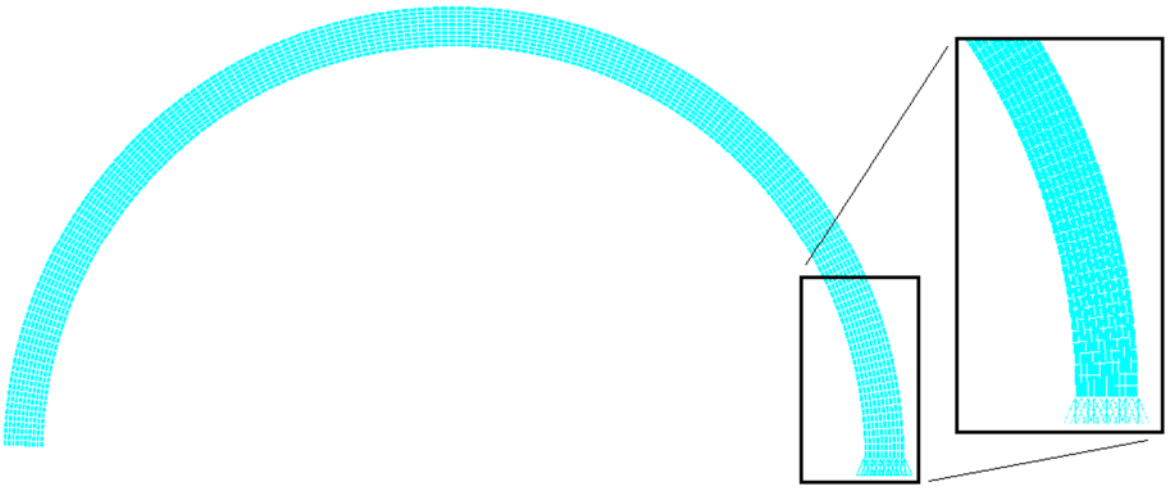

Figure 3. Typical ring mesh

2.2. Simulated Annealing Method

It was decided to use Simulated Annealing Method due to its insensitivity to get trapped in local minima. Simulated Annealing algorithm used in optimization is presented in the list below (prepared basing on [4] and [5]) and visualised in figure 4. In a scheme $\overline{x_0}$ stands for actual most optimal geometry, $\overline{x_1}$ stands for a new randomly generated geometry. $F(\overline{x_0})$ and $F(\overline{x_1})$ are their objective functions and

$p(\mathrm{F}(\overline{x_0}), \mathrm{F}(\overline{x_1}), T)$ is a probability function which is given by an equation (9) while r is a random number generated from uniform distribution of $\langle 0,1 \rangle$ set.

1) Generate first input geometry $\overline{x_0}$
2) Determine its objective function $F(\overline{x_0})$
3) Generate another random geometry $\overline{x_1}$ in neighbourhood of $\overline{x_0}$ according to Gaussian distribution and find its objective function $F(\overline{x_1})$
4) Check $F(\overline{x_1}) < F(\overline{x_0})$ condition:
   - if positive, substitute $\overline{x_0}$ with $\overline{x_1}$ and $F(\overline{x_0})$ with $F(\overline{x_1})$
   - if negative, check condition $p(F(\overline{x_0}), F(\overline{x_1}), T) > r$:
     - if positive, substitute $\overline{x_0}$ with $\overline{x_1}$ and $F(\overline{x_0})$ with $F(\overline{x_1})$
     - if negative, do nothing
5) Repeat commands 3-4 N_1 times
6) Lower the temperature according to the schedule
7) Repeat commands 3-6 N_2 times

$$p(\mathrm{F}(\overline{x_0}), \mathrm{F}(\overline{x_1}), T) = \exp\left(-\left(\mathrm{F}(\overline{x_1}) - \mathrm{F}(\overline{x_0})\right) \cdot T^{-1}\right) \tag{9}$$

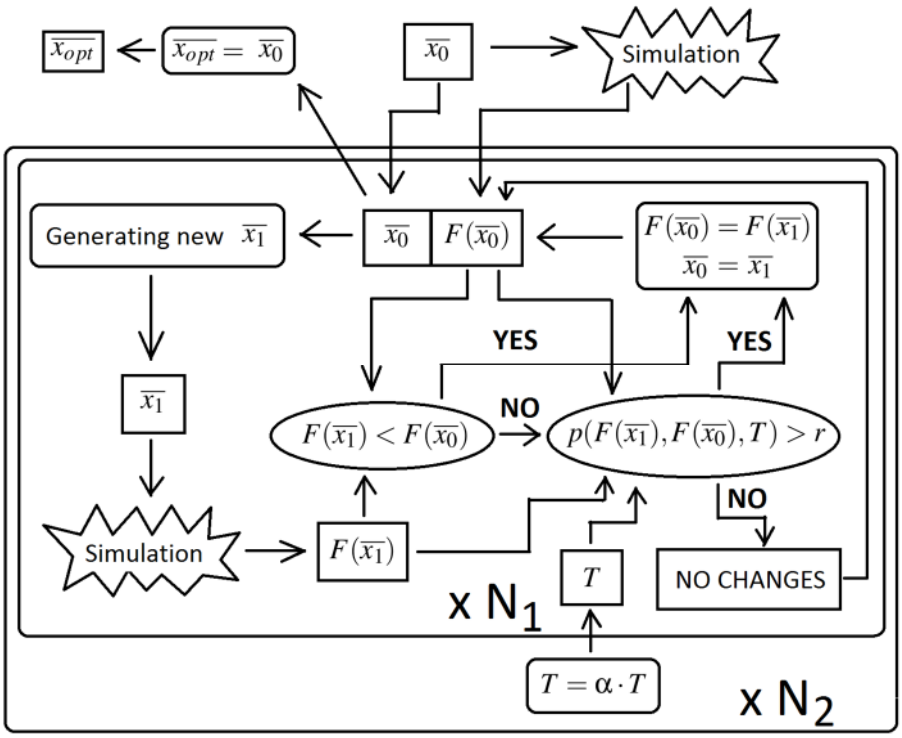

Figure 3. Simulated Annealing Method scheme

3. Problems during optimisation and results

During optimisation process design and its implementation several problems had occurred and optimisation did not bring expected results.

3.1. Local minima

It is possible to prove by mechanics of structures methods that there is only one unique geometry which would possibly bring demanded pressure distribution [2]. Due to bending deflection analysis of a ring [3] it is expected for radial coordinate value to consequently grow as long as angular coordinate get further from ring's centre. For such geometry the objective function will obtain value near to 0 (it cannot bring 0 value since defined p_{opt} does not fully fulfil equilibrium equations) which is the first deep minimum. The second deep minimum is a geometry of constant radius of $\mathrm{r} = 27.5mm$ which will obviously result in $F = 2$. Taking into account a fact that even small geometry disturbances results in

huge objective function growth (maximum objective function spotted in a simulation was over 1 million) they are very deep and very far from each other. It is also expected to spot many other local minima.

3.2. Defining geometry of the ring

Tested in the paper method of defining geometry consists of 31 polynomials of 5th order in polar coordinate system as shown in equation (10). Each of them is defined at interval of $\Delta\theta = 6°$ except last three of them which are defined at the interval of $\Delta\theta = 4°$. Their coefficients are computed from boundary conditions for r, r', r'' in 32 nodes. Common nodes for two consecutive polynomials results in automatically fulfilled continuity conditions up to the second derivative.

$$\mathrm{r}(\theta) = \mathrm{a}\theta^5 + \mathrm{b}\theta^4 + \mathrm{c}\theta^3 + \mathrm{d}\theta^2 + \mathrm{e}\theta + f \tag{10}$$

The basic problem of such geometry definition is its complexity. Full geometry is defined by 94 variables (number of sum of polynomial coefficients is decreased by 2 because $\mathrm{r}(0)$ and $\mathrm{r}'(0)$ are already assumed to be 0 due to symmetry of a ring). Any of those variables could change in two ways – they can rise or drop – but only one of those directions leads geometry toward the optimal geometry (which is unique as it was previously noted). For that reason probability of getting closer to optimal solution is concluded to be not larger than $p = 2^{-94}$. Therefore only one of $1.98 \cdot 10^{28}$ simulations has even a chance of getting closer to a proper solution disputing that there are probably needed a few steps to obtain an optimal geometry. Even assuming that every optimisation step takes only one second (which could be obtained probably on the few fastest computers in the world, if any) it would take far too much computing time to be reasonable.

3.3. Results for 5th order polynomial piecewise function

Function presented in a previous paragraph was tested. It was tested in a few configurations of geometry definition, however only one of them was chosen as the most representative and is presented in the article. Initial geometry was very roughly estimated basing on Smoliński program [6]. Initial geometry as well as assumed standard deviations of geometry generation are presented in a figure 5 and table 2, respectively. Temperature function was set to start from $T_0 = 492956$ and its drop to be $\alpha = 0.6$. Temperature have dropped 29 times until ended at $N_2 = 30$ and T= 0.39. For last temperature probability function in case of objective function growth of 1 takes value of only $p = 0.0041$. Temperature function is presented graphically at figure 6. At each temperature the simulation was performed $N_1 = 200$ times.

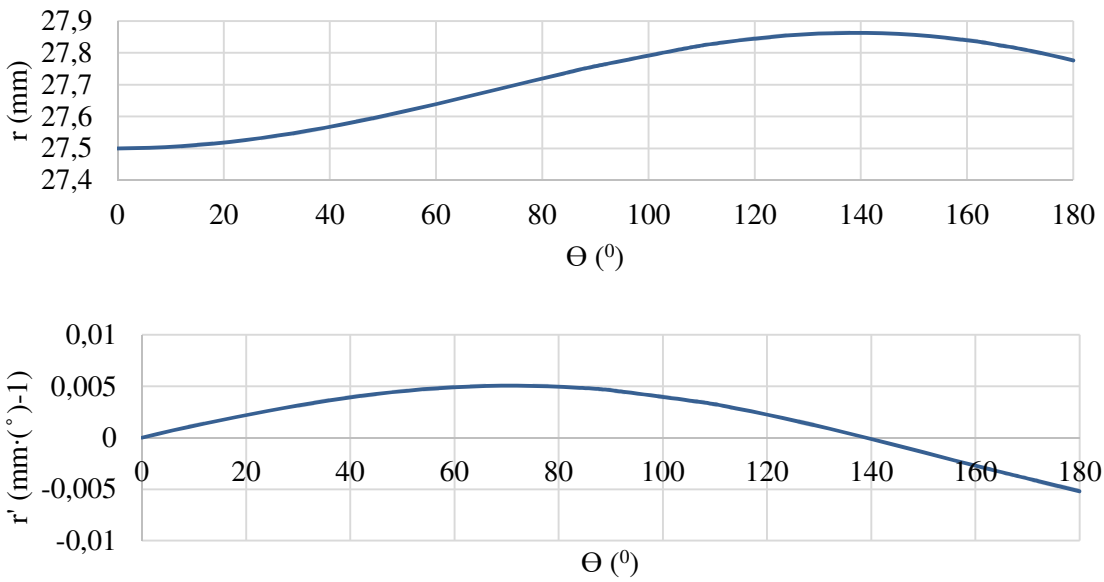

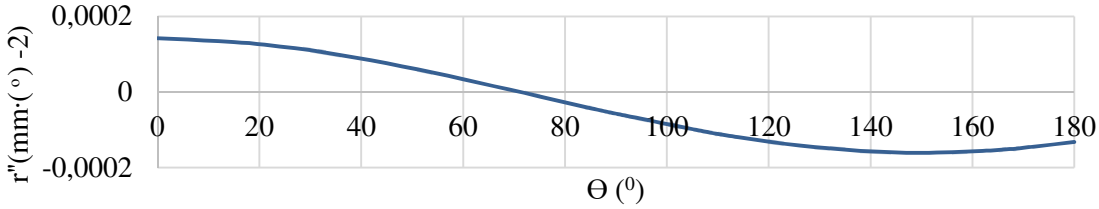

Figure 5. Initial geometry functions r, r', r''(θ).

Table 2. Standard deviation values

σ_r	0.003 mm
$\sigma_{r'}$	$0.0002\ \mathrm{mm} \cdot (°)^{-1}$
$\sigma_{r''}$	$0.0000009\ \mathrm{mm} \cdot (°)^{-2}$

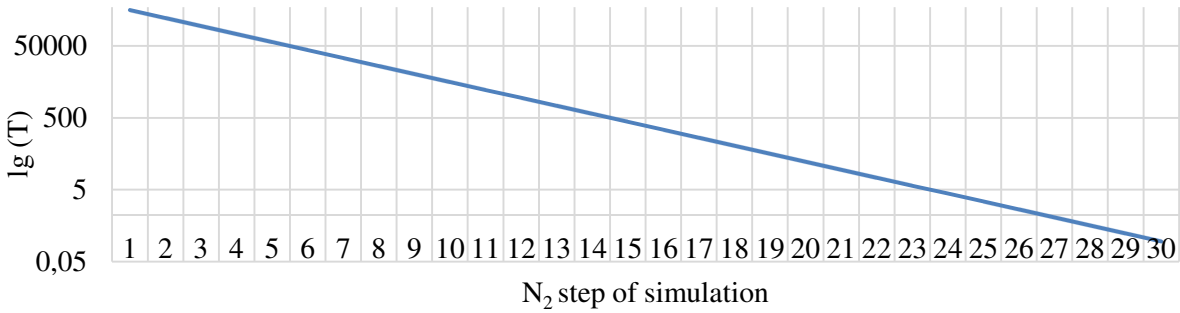

Figure 6. Temperature function

Optimization process is presented in figure 7. As it is typical for Simulated Annealing Method in the beginning the current most optimal geometry almost every time changes its value to a new value whether it is lower or not. As the temperature comes down, geometry changes less rapidly and only in case of the better values of objective function. The lowest objective function was not obtained at the end of optimisation – probably it could be improved by increasing standard deviation values. However, even the lowest of objective function values obtained cannot be accepted since its value is as much as 23603 which corresponds to summary 2360300% of pressure divergence from assumed distribution. Pressure distribution for geometry corresponding to the lowest value of objective function is presented in a figure 8.

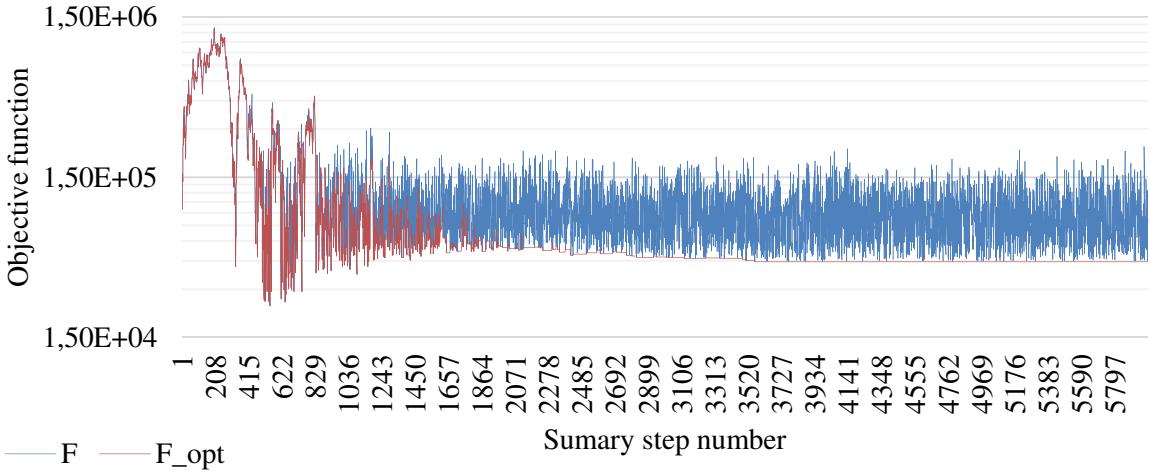

Figure 7. Optimisation progress

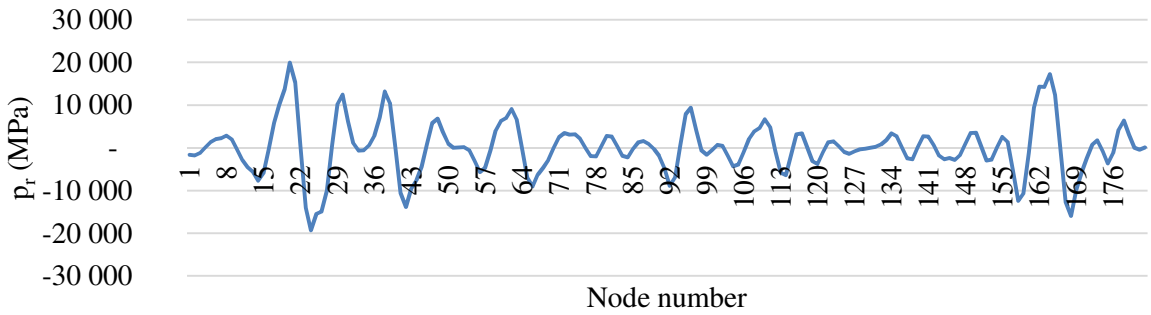

Figure 8. Pressure distribution for lowest objective function obtained

4. Conclusions

Optimisation by Simulated Annealing method was performed fully in APDL. Nevertheless it has not converged to acceptable solution inter alia due to geometry complexity which has led to a problem with a probability of finding optimal geometry. It has been observed that defining method of the geometry and standard deviations values of new geometry generation are among the most important issues for a Simulated Annealing Optimisation. The Authors' suggestion for further implementation of the method is degradation of geometry definition to a simpler one. For example two defining polynomials of 5th order would result in only 7 independent variables (assuming continuity of geometry up to the 2nd derivative). In such a case probability of finding geometry closer to an optimal one is approximately $p = 2^{-7} = 7.81 \cdot 10^{-3}$ which is a great improvement comparing to a tested case.

References

[1] Wajand J A and Wajand J T 2005 *Tłokowe silniki spalinowe średnio- i szybkoobrotowe* (Warszawa: Wydawnictwo Naukowo Techniczne)
[2] Kozaczewski W 2004 *Konstrukcja grupy tłokowo-cylindrowej silników spalinowych* (Warszawa: Wydawnictwa Komunikacji i Łączności)
[3] Iskra A 1996 *Studium konstrukcji i funkcjonalności pierścieni w grupie tłokowo-cylindrowej* (Poznań: Wydawnictwo Politechniki Poznańskiej)
[4] Yang X-S 2010 *Engineering Optimization: An Introduction with Metaheuristic Applications* (United Kington: John Wiley and Sons)
[5] Bertsimas D and Tsitsiklis J 1993 Simulated annealing *Statistical Science* **8** 10-5
[6] Smoliński R 2013 *Projekt i optymalizacja wielopierścieniowego uszczelnienia tłoka* (Master's Thesis in Faculty of Power and Aeronautical Engineering, Warsaw University of Technology)