Virtual modelling of components of a production system as the tool of lean engineering

Z Monica[1]
[1]Silesian University of Technology, The Faculty Of Mechanical Engineering, Institute Of Engineering Processes Automation And Integrated Manufacturing Systems, ul. Konarskiego 18a 44-100 Gliwice, Poland

E-mail: zbigniew.monica@polsl.pl

Abstract. Between the most effective techniques of manufacturing management is considered the Lean Engineering. The term "lean engineering" was created by Japanese manufacturers. The high efficiency of this method resulted in a meaningful growth in concern in the philosophy of Lean among European companies, and consequently the use of its European markets. Lean philosophy is an approach to manufacturing to minimize the use of all resources, including time. These are resources that are used in the company for a variety of activities. This implies, first identify and then eliminate activities which does not generate added value in the field of design, manufacturing, supply chain management, and customer relations. The producers of these principles not only employ teams multi-professional employees at all levels of the organization, but also use a more automated machines to produce large quantities of products with a high degree of diversity. Lean Engineering is to use a number of principles and practical guidelines that allow you to reduce costs by eliminating absolute extravagance, and also simplification of all manufacturing processes and maintenance. Nowadays it could be applied the powerful engineering programs to realize the concept of Lean Engineering. They could be described using the term CAD/CAM/CAE. They consist of completely different packages for both the design of elements, as well process design. Their common feature is generally considered with their application area. They are used for computer programs assisting the design, development and manufacturing phases of a manufacturing process. The idea of the presented work is to use the Siemens NX software for aiding the process of Lean Engineering system creating. The investigated system is a robotized workcell. In the NX system are created the components of the designed workcell such as machine tools, as industrial robot, as conveyors and buffers. The system let to functionally link these components to simulate the work process and to introduce the rules of Lean Engineering. The purpose is also to determine the rules of Lean designing in such advanced design and simulation environments.

1. Introduction

One of the elements of a modern attitude towards the designing and optimization of complex technical systems is the use of advanced computer engineering environments [1,2]. They allow the betterment of technical solutions both in terms of geometric features and materials ones [3,4,5], which cause increasing of the quality level of technical solutions. The complementary approach is represented by solutions of specific problems that could be identified in complex technical systems [6,7]. This work presents a general approach based on the use of a 3D object of a manufacturing system, as a robotized


Content from this work may be used under the terms of the Creative Commons Attribution 3.0 licence. Any further distribution of this work must maintain attribution to the author(s) and the title of the work, journal citation and DOI.
Published under licence by IOP Publishing Ltd

work cell, to the issue of manufacturing process optimizing. The investigated system includes three devices: one lathe, one milling centre and one robot. This virtual environment was created using the Siemens NX 8.5 program

2. Creating the model of the lathe AFN TAE 45

The first element, of the created workcell, was the 3D model of the TAE AFN 45 lathe (figure 1). The model was developed using previously developed components (figure 2). It has a processor that allows executing instructions programmed in G-code.

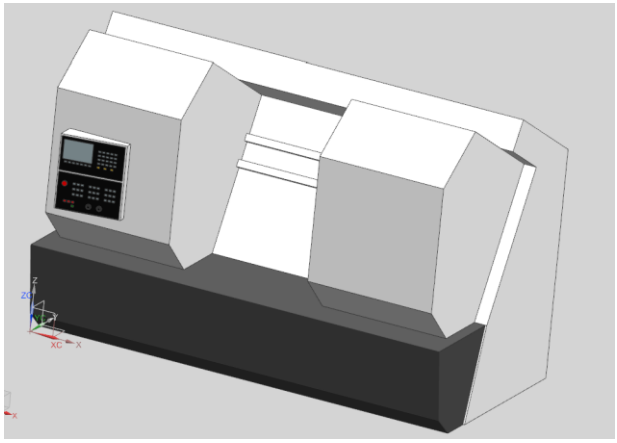

Figure 1. The 3D model of the lathe AFN TAE 45.

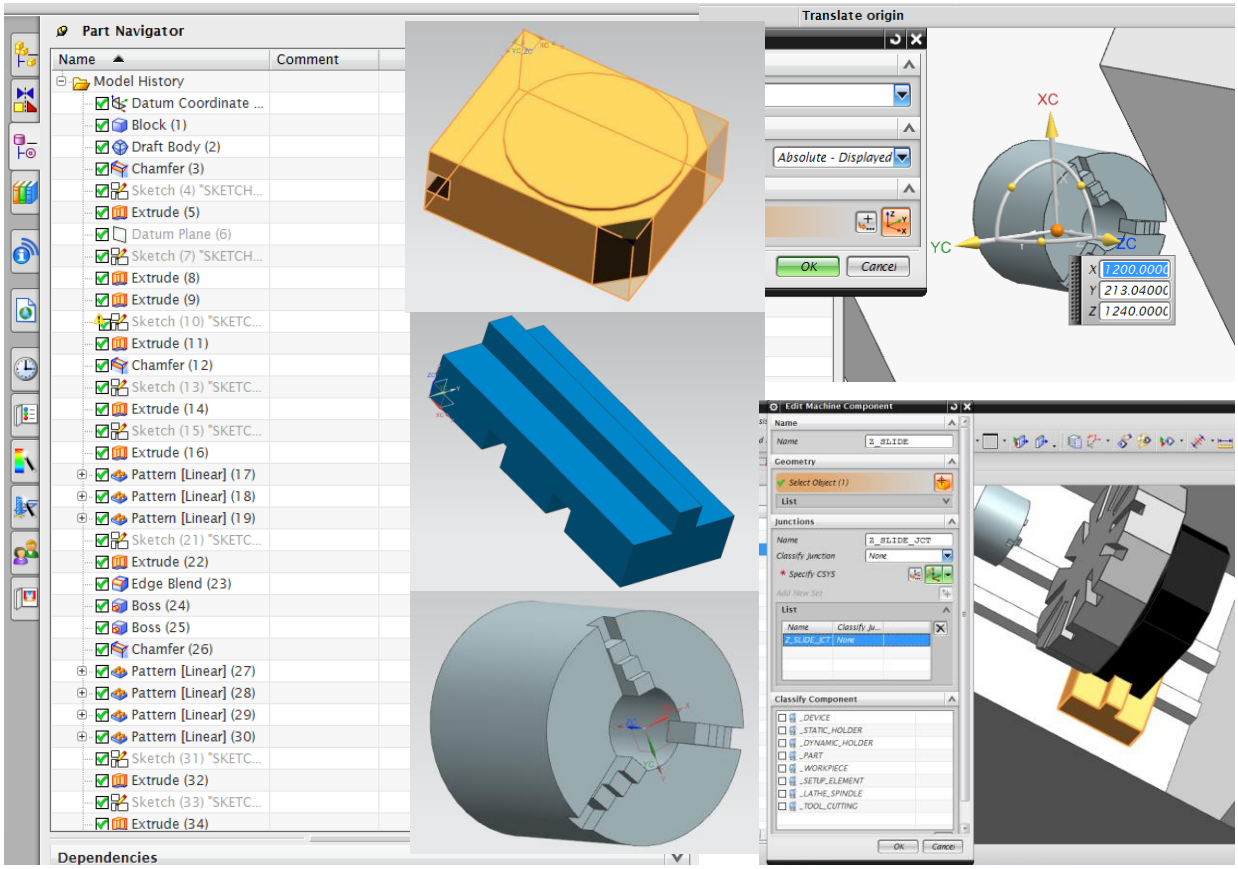

Figure 2. Stages of the lathe model creating.

The prepared model of the lathe could utilize 3D models of different actuators [8] or use information from real sensors to control the operation of the machine tool [9]. It also has a virtual input and output slots to link with other devices in the workcell.

3. Creating the model of the milling machine R1000 "Baca"

The second element, of the designed workcell, was created the R1000 "Baca" milling machine. Its 3D model is illustrated below (figure 3). Also the model of the milling machine was created as the assembly of the previously designed components (figure 4). It could be concluded additionally that the resulting base of component allows creating a broader base of models machine tools.

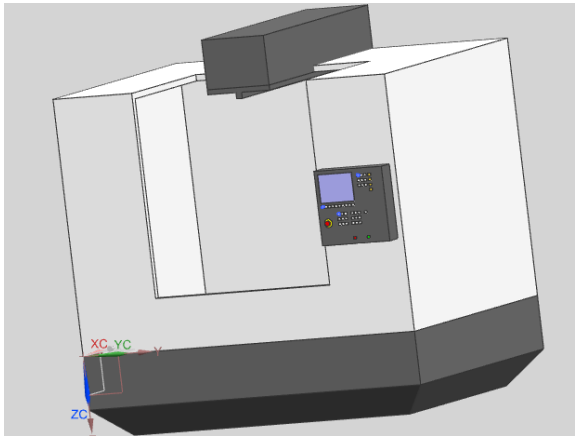

Figure 3. The 3D model of the milling machine R1000 "Baca".

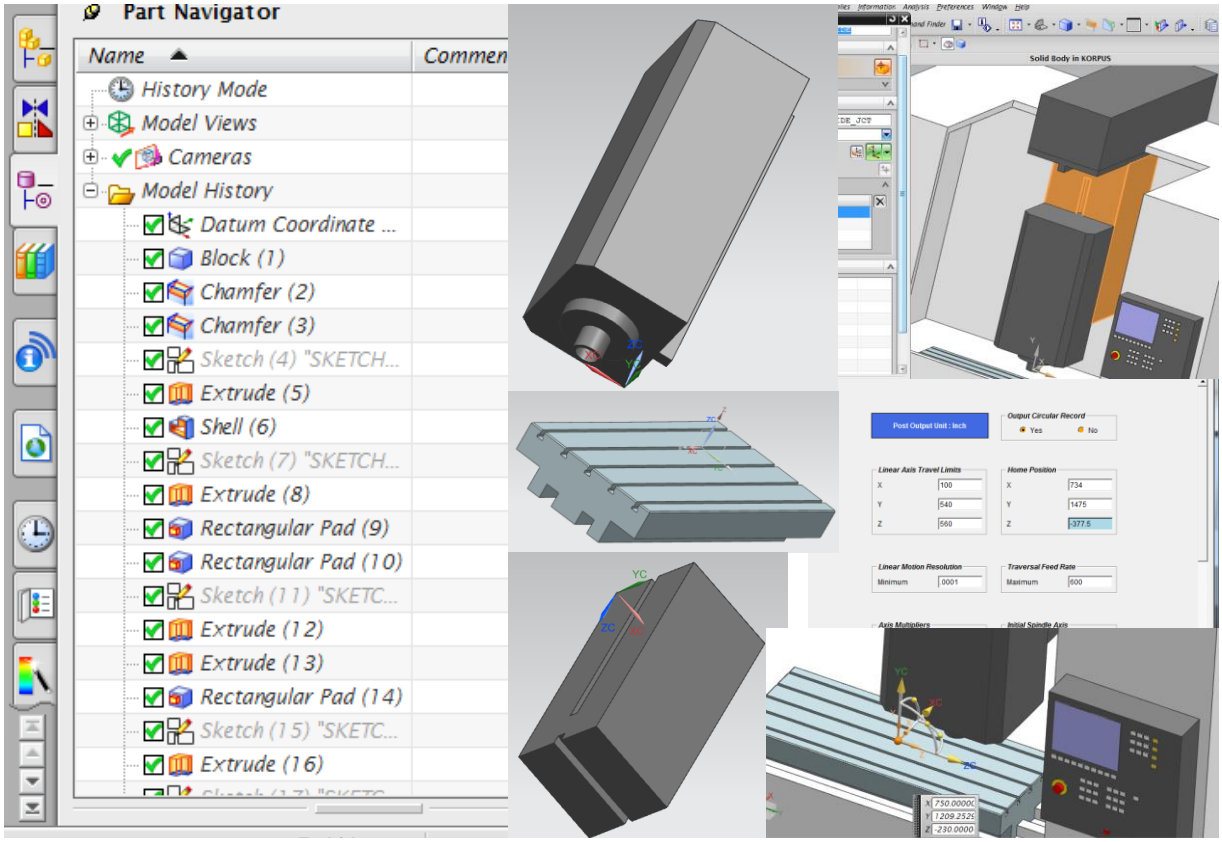

Figure 4. Stages of the milling machine model creating.

The 3D model of the milling machine was also completed with a program controller for the realization of programs prepared in G-code. It also has an input output slots for external communication and cooperation within the framework of the manufacturing system.

4. Creating the model of the robot M-16iiB

The last component of the manufacturing system was created the robot M-16iiB (Fanuc). Figure 5 shows the model and selected structural components of the robot. This model was selected as a pattern of the highest prevalent type of applied industrial robots.

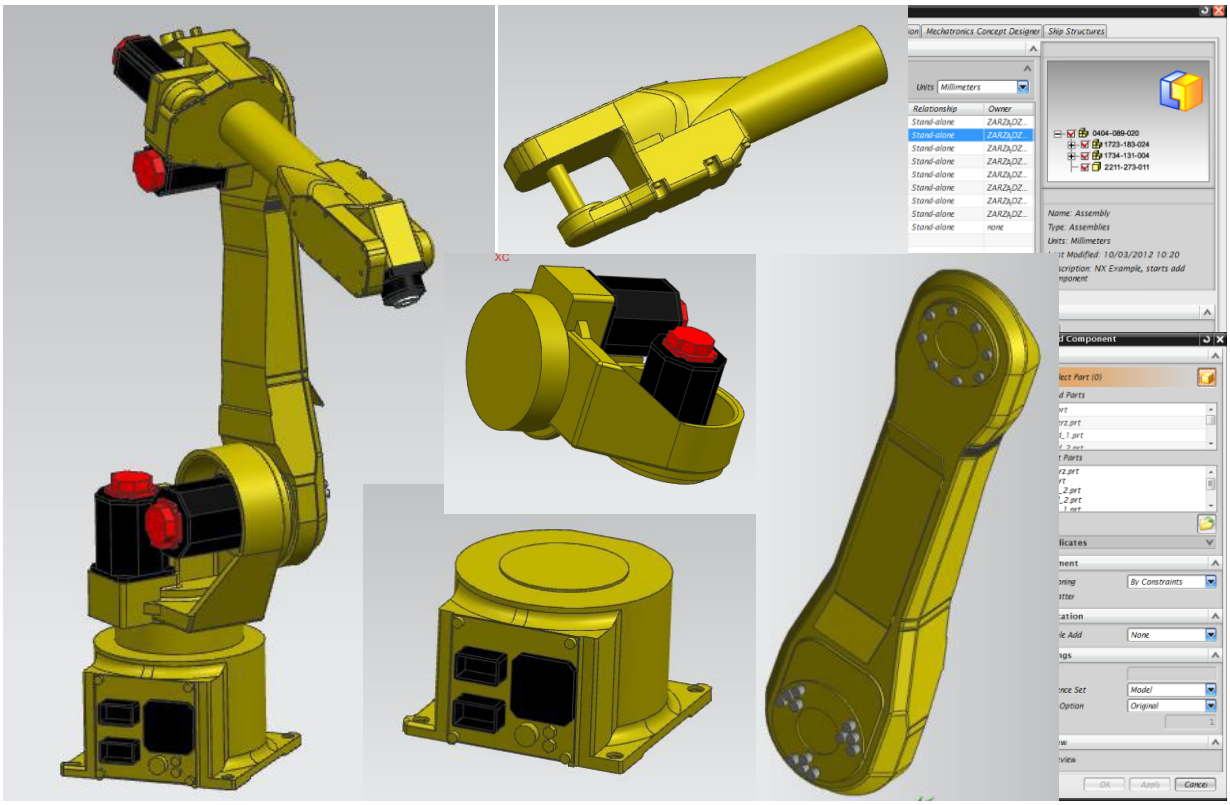

Figure 5. Creating the model of the robot M-16iiB.

The 3D model of the robot also is equipped input and output slots. Simultaneously, the robot controller allows controlling the sequence of operation of other devices. It could be purposeful to use information from real control systems [10,11].

5. The model of the designed workcell

Using the integrative approach [12] it was developed the 3D model of the entire manufacturing workcell (figure 6). In addition to the creation of the 3D model it was also identified relations between particular devices within the workcell control system. This model could be determined as a test one, used to investigate the overall dependences occurring in the manufacturing process.

The devices in the workcell cooperate with each other. Coordinating element is the controller of a robot. This order of operations includes the flow of a workpiece through the lathe and milling machine. Robot cooperates with particular machine tools (figure 7), as a device transporting and reorienting the workpiece. Robot controller also runs programs that control the particular machine tools and receives signals on the end of each procedure of realized programs. Thus, it could be observed, in a virtual environment, the work of the manufacturing workcell and analyzing the sequence of its operations in order to optimize the workcell work, including minimizing downtimes.

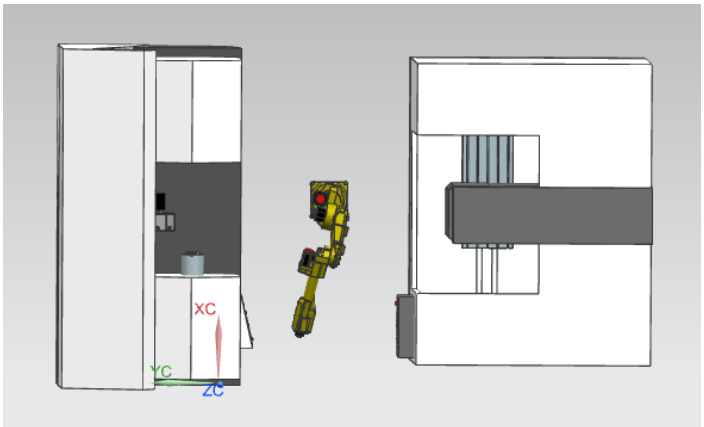

Figure 6. 3D model of the workcell

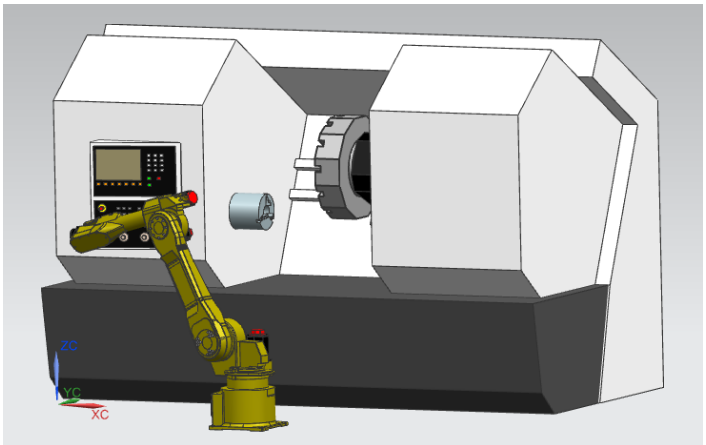

Figure 7. Cooperation of the robot with the lathe

Observations of the manufacturing process, and following analysis of the obtained schedules, let to locate bottlenecks in the process and to analyze them. In this way it is purposeful optimizing both the sequence of operations and the trajectory of robot moves. One would also connect the workcell with an external computer, on which can be implemented the program for automatic optimization, in real time, of the manufacturing process. This program cab be based on the deployment of multi-agent approach [13,14].

6. Conclusions

The solution is a part of studies on the controlling the manufacturing systems using modern technical solutions. In the most basic level, it uses the capabilities of modern systems for aiding engineering work and modeling of virtual environments [15,16]. They allow analyzing complex optimization problems without creating real technical systems.

The presented systems may be equipped with the procedures for controlling and optimization of operations on the base of modern information systems such as advisory programs [17]. This allows striving to develop methods of controlling the manufacturing systems, including the optimization procedures, which will operate in real time.

The other problem considered with creating 3D models of industry systems is to prepare the production plan that can optimize the resources utilization in the investigated system [18,19]. This task is the simpler that it could be realized also by the simulation approach [20].

References

[1] Dymarek A and Dzitkowski T 2012 Method of active synthesis of discrete fixed mechanical systems *J. of Vibroeng*. **14/2** pp 458-463

[2] Monica Z, Ociepka P and Herbuś K 2008 Symulacja procesu obróbki w oparciu o utworzony model obrabiarki w programie Unigraphics *Górnictwo Odkrywkowe* **4-5** pp 110-113
[3] Grajcar A, Płachcińska Topolska S and Kciuk M 2015 Effect of thermomechanical treatment on the corrosion behaviour of high-Mn austenitic steel with silicon and aluminum addition *J. Mat. in Tehn. / J. Mat. and Techn.* **6** pp 73-79
[4] Ćwikła G 2014 Real-time monitoring station for production systems *Adv. Mat. Res*. **837** pp 334-339
[5] Topolska S and Łabanowski J 2015 Duplex stainless steels toughness impact investigations *J. Mat. in Tehn. / J. Mat. and Techn*. **5** pp 114-119
[6] Dymarek A and Dzitkowski T 2013 Reduction vibration of mechanical systems *App. Mech. and Mat.* **307** pp 257-260
[7] Gwiazda A 2014 System of designing complex technical means using fuzzy analysis *App. Mech. and Mat.* **474** pp 147-152
[8] Płaczek M 2014 Computer aided analysis of systems with MFC actuators *Adv. Mat. Res*. **1036** pp 711-714
[9] Płaczek M 2013 Dynamic characteristics of a piezoelectric transducer with structural damping *Sol. St. Ph*. **198** pp 633-638
[10] Hetmańczyk M 2015 The prediction oriented analysis of mechatronic machine structures recorded by directed graphs *Sol. St. Ph.* **220-221** pp 429-434
[11] Michalski P, Hetmańczyk M and Świder J 2013 Simply-integrated method of judgments of expert knowledge collected in databases for objective computer-aided engineering systems *Hyb. Art. Int. Sys.* **8073** pp 262-268
[12] Sękala A, Gwiazda A, Monica Z and Banaś W 2014 Optimization of the Lean Production process using the virtual manufacturing cell *Adv. Mat. Res*. **1036** pp 858-863
[13] Sękala A and Dobrzańska-Danikiewicz A 2015 Possibilities of application of agent-based systems to support functioning of e-manufacturing environment *Sol. St. Ph*. **220/221** pp 781-784
[14] Sękala A, Gwiazda A and Banaś W 2014 Agent-based systems approach for robotic workcell integration *Adv. Mat. Res*. **1036** pp 721-725
[15] Monica Z 2011 Symulacja procesu obróbki na podstawie modelu obrabiarki utworzonego w programie NX *Wybrane Problemy Inżynierskie* **2** pp 267-272
[16] Gwiazda A 2014 System of designing complex technical means using fuzzy analysis *App. Mech. and Mat.* **474** pp 147-152
[17] Michalski P, Hetmańczyk M and Świder J 2013 Simply-integrated method of judgments of expert knowledge collected in databases for objective computer-aided engineering systems *Hyb. Art. Int. Sys.* **8073** pp 262-268
[18] Paprocka I, Kempa W M, Kalinowski K and Grabowik C 2014 A production scheduling model with maintenance *Adv. Mat. Res*. **1036** pp 885-890
[19] Paprocka I, Kempa W M, Kalinowski K and Grabowik C 2014 On Pareto Optimal Solution for Production and Maintenance Jobs Scheduling Problem in a Job Shop and Flow Shop with an Immune Algorithm *Adv. Mat. Res*. **1036** pp 875-880
[20] Krenczyk D and Olender M 2014 Production planning and control using advanced simulation systems Int. J. of Modern Manufacturing Technologies **VI/2** pp 38-43