IOP Conf. Series: Journal of Physics: Conf. Series **874** (2017) 012028 doi:10.1088/1742-6596/874/1/012028

First results with the novel petawatt laser acceleration facility in Dresden

U Schramm, M Bussmann, A Irman, M Siebold, K Zeil, D Albach, C Bernert, S Bock, F Brack, J Branco, JP Couperus, TE Cowan, A Debus, C Eisenmann, M Garten, R Gebhardt, S Grams, U Helbig, A Huebl, T Kluge, A Köhler, JM Krämer, S Kraft, F Kroll, M Kuntzsch, U Lehnert, M Loeser, J Metzkes, P Michel, L Obst, R Pausch, M Rehwald, R Sauerbrey, HP Schlenvoigt, K Steiniger, O Zarini

Helmholtz-Zentrum Dresden-Rossendorf, 01328 Dresden, Germany
Technische Universität Dresden, 01069 Dresden, Germany

E-mail: u.schramm@hzdr.de

Abstract. We report on first commissioning results of the DRACO Petawatt ultra-short pulse laser system implemented at the ELBE center for high power radiation sources of Helmholtz-Zentrum Dresden-Rossendorf. Key parameters of the laser system essential for efficient and reproducible performance of plasma accelerators are presented and discussed with the demonstration of 40 MeV proton acceleration under TNSA conditions as well as peaked electron spectra with unprecedented bunch charge in the 0.5 nC range.

1. Introduction

Plasma based concepts providing compact high gradient acceleration of electron and ion bunches receive growing interest in the particle accelerator community. Highest peak currents at ultra-short pulse duration, high initial energies, and point-like sources represent beam parameters that may open numerous applications from medical therapy to compact and bright light sources. On the other hand, a number of parameters like energy spread, average power, reproducibility, or matched diagnostics remains to be understood and controlled before demanding applications can be served in routine operation, standard to conventional rf accelerator technology.

For this reason the German Helmholtz Association has recently launched the dedicated program "Accelerator Research and Development (ARD)" building on and focusing the unique combination of research in superconducting rf accelerator physics and relativistic plasma physics at DESY Hamburg, KIT Karlsruhe, GSI Darmstadt (together with HI-Jena) and HZDR Dresden. In this article we introduce the Dresden "ELBE center for high power radiation sources" where in the extended building (Figure 1) of the superconducting cw linear electron accelerator ELBE two conceptually different Petawatt laser systems are currently under commissioning.


Content from this work may be used under the terms of the Creative Commons Attribution 3.0 licence. Any further distribution of this work must maintain attribution to the author(s) and the title of the work, journal citation and DOI.
Published under licence by IOP Publishing Ltd

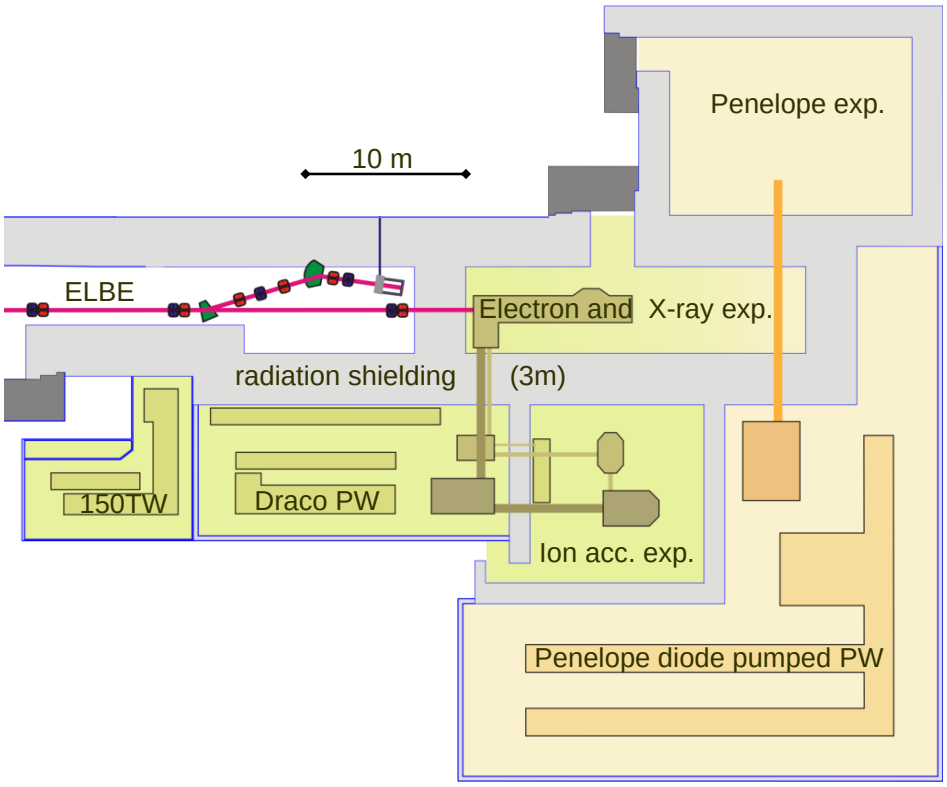

Figure 1. Floor plan of the upgraded HZDR ELBE center for high power radiation sources, illustrating the placement of the two PW lasers as close as possible to the dedicated target areas presently under operation or development (green: DRACO (Dresden Laser Acceleration Source), orange: PEnELOPE (Petawatt energy efficient laser for plasma experiments)) and the connection to the beamline of the linear accelerator (red) with its user facility radiation sources (not shown) extending to the left.

2. PW laboratory infrastructure

On the one hand, energy efficient laser technology supporting highest peak and average power simultaneously in a presently unaccessible range is developed in the framework of the PEnELOPE laser project [1]. It relies on direct diode laser pumping of the broad-band gain medium Yb:CaF_2 [2, 3, 4], expected to support pulse durations of 100-150 fs and energies of up to 150 J on target. PEnELOPE serves as a prototype for the development of 1 Hz pulse repetition rate compatible pumping and cooling techniques and as a driver for plasma proton acceleration with the focus on studying the applicability for radiation tumor therapy [6, 5]. The project, having reached the 10 J energy level in the lasers second to last major amplifier is closely linked to the ongoing development of the POLARIS laser system operated at the HI-Jena on target at a 250 TW level with highest available pulse intensity contrast in this pulse duration regime [7].

On the other hand, and complementing lased development with plasma accelerator research, the ultra-short pulse 150 TW Ti:Sapphire laser DRACO [8] has been upgraded (Amplitude Technologies) to a dual beam double chirped pulse amplification (CPA) system providing full Petawatt (30 J in 30 fs) and 150 TW (4.5 J in 30 fs) on target with optimized temporal pulse contrast and beam quality. The concept of the laser system, incorporating active spectral phase

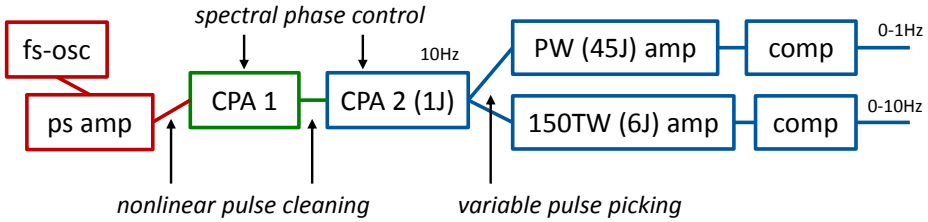

Figure 2. Concept of the double CPA (chirped pulse amplification) dual beam Ti:Sapphire 150 TW / PW laser chain DRACO at HZDR. Colors indicate stages, the fs front-end (red), a first 20 mJ CPA stage consisting of regenerative and multi-pass amplifiers with full active spectral phase and amplitude control (green), pulse cleaning (XPW), a second CPA stage where the beam is split on the J-level to seed final (partially cryogenic) amplifiers and independently operating compressors. Beam quality on target is fed back to the active elements of the second CPA stage.

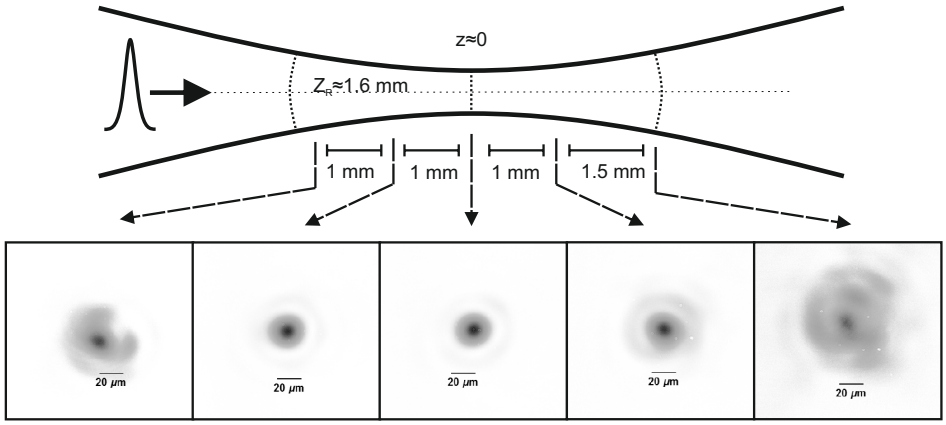

Figure 3. Development of the transverse intensity profile of the laser pulse in the vicinity of the focal spot generated with an F/20 off-axis parabolic mirror.

control for optimum temporal pulse profiles, booster amplifiers and cross-polarized wave (XPW) pulse cleaning for optimum temporal contrast, pump beam profile homogenization for smooth near field profiles, active beam pointing stabilization, full active back-reflection protection, and multiple adaptive optics for wavefront correction is sketched in Figure 2.

An illustration of the spatial beam quality is given with Figure 3 where the propagation of the beam at full energy through the focus of a plasma wakefield accelerator is investigated [9]. Beam quality on target thus corresponds to a Strehl-ratio of better than 0.9 ensuring sufficient energy content in the focal spot as well as controlled propagation even under non-linear plasma conditions. Improvement of the temporal pulse contrast, as mandatory for the interaction with down to skin-length (few nm) thick solid density targets, is provided for both chains close to the

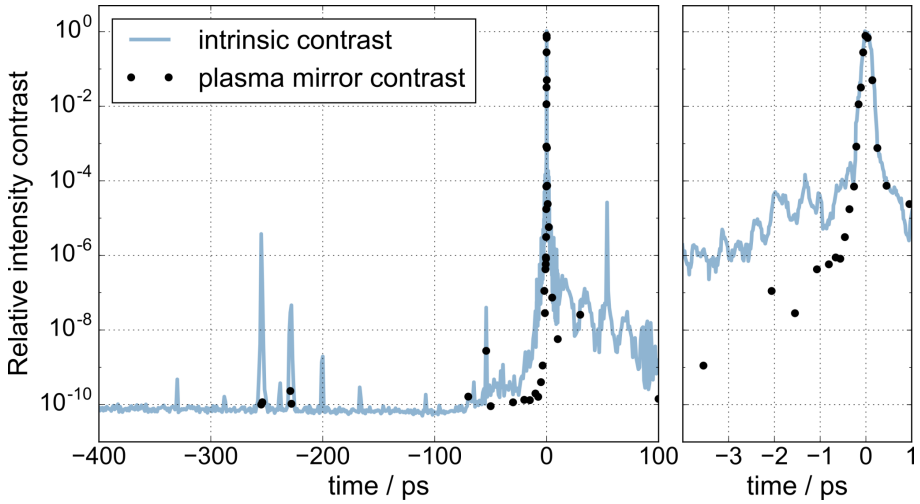

Figure 4. Intensity pulse contrast, measured with a scanning third order autocorrelator for the standard configuration (intrinsic) and behind a single stage plasma mirror (dots), highlighting the contrast improvement on the ps-scale.

target by single-stage plasma mirrors [10]. The actual temporal contrast representing conditions at full laser energy on target is displayed in Figure 4. A sharp central peak (width 30 fs, here measurement resolution limited) can be provided within the dynamic range of active spectral phase measurement and feedback (10^{-4}) and is preceded by a pedestal slowly raising between -20 to -10 ps from the ASE background level of few 10^{-11} (monitored up to -2 ns). Few discrete pre- and post-pulses still appear, which can however be controlled by the plasma mirror.

Figure 1 summarizes the laboratory infrastructure built at HZDR for advanced accelerator research. Connected and synchronized to the intense ps long bunches of the ELBE accelerator, pulses of both laser systems can be guided to permanently installed and equipped target areas with dedicated topical focus and corresponding radiation protection measures. Ion acceleration experiments require short focal length irradiation of solid targets and, ideally, options for reference irradiation under well-defined conditions for the direct comparison of the performance of novel target concepts to reference targets. Electron acceleration in laser driven wakefields requires long focal length for matching laser beam propagation with the guiding properties of the generated long plasma channel. X-ray generation requires long forward observation geometries [11] and potentially colliding pulse scenarios as for the case of two beam Thomson-scattering experiments. These can be exploited as ultra-short synchronized probes of plasma experiments or for the unique phase space diagnostics of acceleration processes [12].

3. Ion acceleration

The realization of ion acceleration with high power lasers [13, 14] holds the promise of providing compact sources for applications where, due to the limited availability of pulse repetition rate, only low average currents are required. The most prominently discussed application is medical, namely particle beam cancer therapy [5] and related radio-biological studies [6]. The most established and robust acceleration mechanism is the so-called Target Normal Sheath Acceleration (TNSA), where ions are accelerated in the sheath field set by laser-energized MeV electrons at the target surfaces. TNSA beams are used in applications, which exploit their

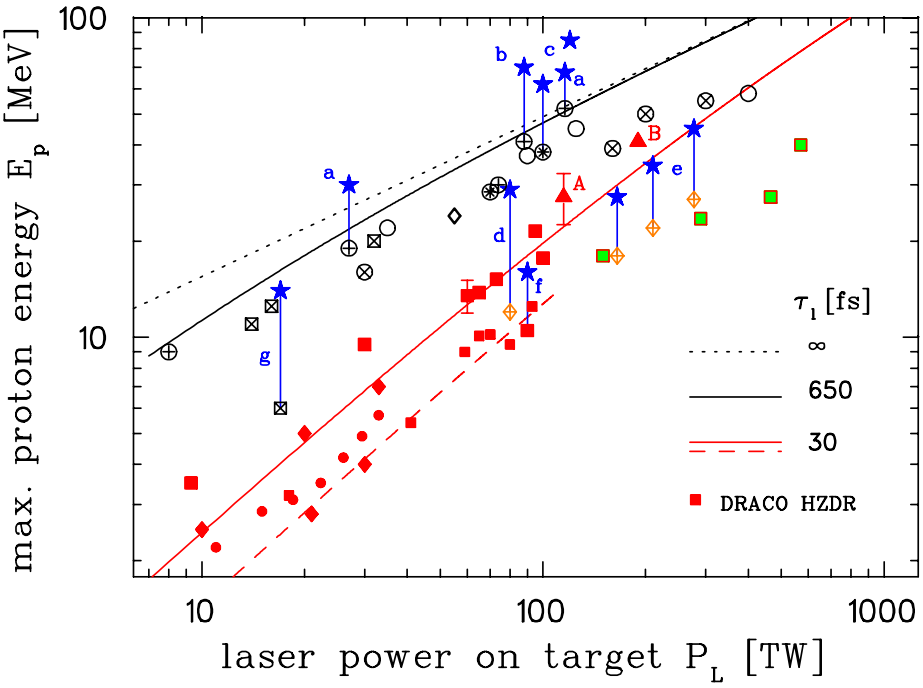

Figure 5. Overview of maximum proton energies achieved with linear polarization as a function of laser power P_L on target based on [15]. The plot is updated with recently published work and emphasizes energy enhancing mechanisms (blue stars, connected to individual TNSA references). Open black symbols as in [8] represent data from single-shot glass laser systems where record energies were reached with a) hollow cone targets [16] and b,c) in regimes where relativistic transparency sets in [17, 18, 19]. Filled symbols depict results obtained with state-of-the-art Ti:Sapphire laser ultra-short pulse systems (as in [8]), squares representing DRACO (HZDR) data [8, 20], circles UHI100 (CEA Saclay) data [21] and A) and B) highlighting recent TNSA improvements [22, 23] on the multi 100 TW laser scale. Energies could be further increased by using e) ultra-thin targets (comparison between thinnest and thickest targets still assumed to be dominated by TNSA) [24], d) carbon nanotube foam coated thin targets [25], or f,g) flat targets of finite size (reduced mass targets) [26, 27]. Promising enhancement factors for protons are typically observed to reach values between 1.5 and 2.5. Recent DRACO PW commissioning data from $1-2\,\mu$m thick Ti-foils is highlighted in green.

advantageous properties such as short burst duration and low emittance (point source). A number of alternative acceleration mechanisms have emerged which promise higher efficiency, and, in some cases, enhanced spectral properties beyond the state-of-the-art exponential spectra characterized by a distinct cut-off energy. The ongoing improvement of laser parameters (pulse energy and contrast, see Figure 4) and diagnostics tools, jointly with technological innovation in target manufacturing are all key factors driving the field. A summary of published data on proton acceleration is presented in Figure 5 illustrating the continuous increase in maximum energy with laser performance and highlighting (stars) the potential for a variety of advanced target

concepts, including (for ps-class pulses and ultra-thin foils) the onset of volumetric interaction in the relativistic transparency regime or geometric, field enhancing effects.

Recent commissioning data, where the DRACO-PW beam was focused with an F/2.5 off-axis paraboloid to a preliminary intensity of $I \sim 6 \cdot 10^{21}\,\mathrm{W/cm^2}$ on 1-2 μm thick Ti-foils is depicted as green squares. Proton energies follow the general trend [14] up to $\sim 40\,\mathrm{MeV}$, although absolute values of maximum energies still remain below the expectation set by scaling data from the 150 TW laser arm. Here, and for different target geometries and types up to 10 MeV proton cut-off energy per Joule of laser energy could be achieved up to a maximum value of about 25 MeV for ultra-thin targets.

4. Electron acceleration

Laser-plasma wakefield acceleration (LWFA) has demonstrated ultra-short (fs) electron bunches with peaked energy distribution up to the multi GeV-range on a centimeter scale. Various injection mechanisms into linear and non-linear wakes have been established in order to control initial phase space and thus energy and energy spread [28], yet, scaling the bunch charge to the nC-level and thus to unprecedented peak current in the hundreds of kA as originally predicted [29] for the non-linear bubble-regime has not yet been achieved.

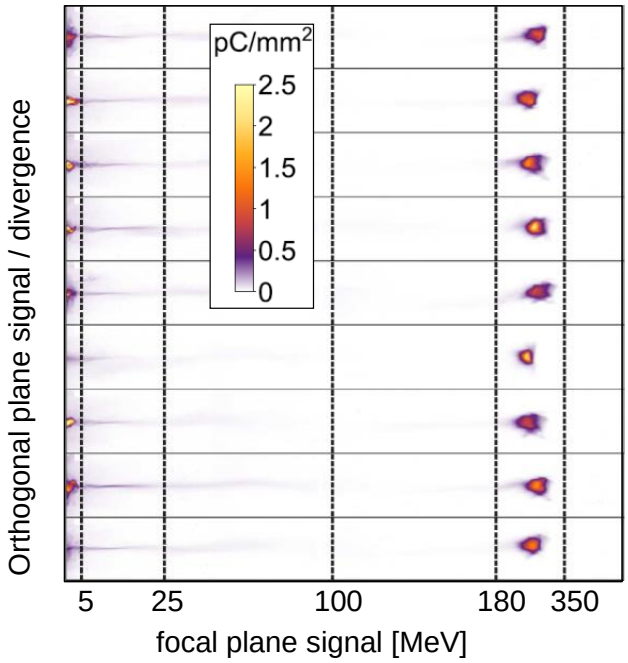

Figure 6. Spectrometer raw-data for 9 consecutive shots illustrating the stability of the peaked energy distribution at low medium energy backround level. Typical charge per bunch is 250 pC (FWHM) in the peak at a relative bandwidth of 15 %.

Schemes relying on ionization injection, where the helium-gas based acceleration medium is doped with small (percent level) fractions of nitrogen, allow for a controlled injection of nitrogen K-shell electrons near the intensity peak of the driving laser pulse. These schemes are known to provide high bunch charge but rather large energy spread. Based on the high quality of the focal spot profile (see Figure3) we recently demonstrated [9] that carefully controlled laser and wakefield evolution enables the restriction of the injection time and thus of the final energy spread. Previous reports on this self truncated ionization injection scheme [30] already demonstrated improved energy bandwidth, yet, at the cost of limited bunch charge.

Well reproducible high charge performance of the plasma wakefield accelerator is summarized in Figure 6, showing a small fraction of a shot sequence in spectrometer raw-data format. Peaked distributions exhibiting total charges of up to 0.4 nC were observed with low background. Only

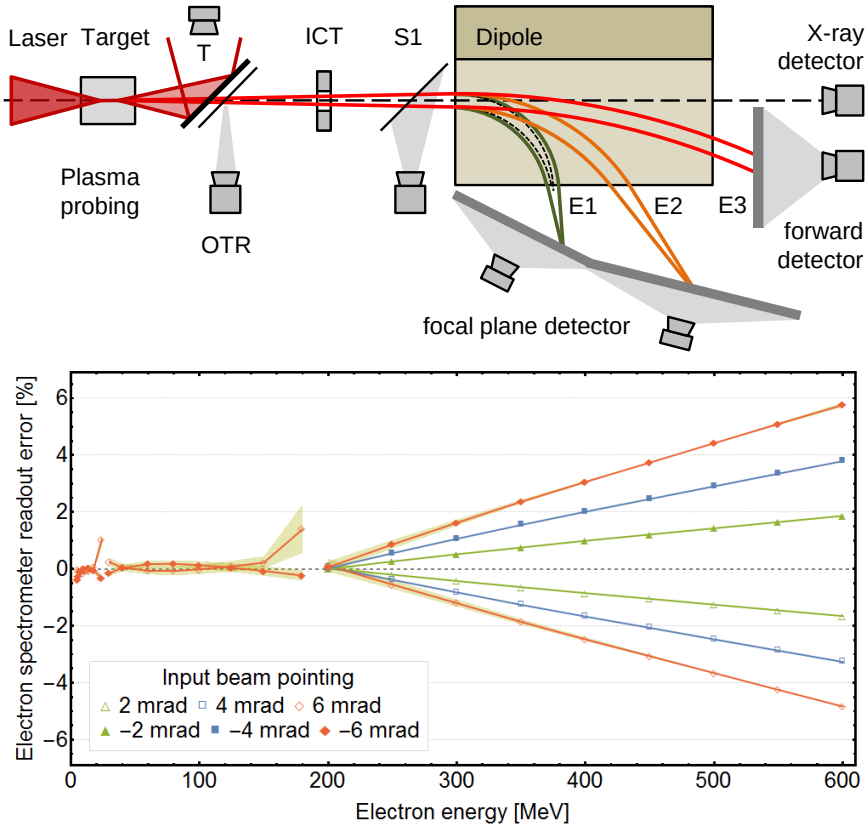

Figure 7. Schematic LWFA electron beam diagnotics setup. Electron bunches are decoupled from co-propagating laser light, pass diagnostics screens for the generation of transition radiation (OTR) or profile and pointing monitoring (S1), are globally charge analyzed by integrating current transformers (ICTs), are energy analyzed in a dispersive dipole magnet and finally dumped. Spectrometers are used in imaging (E1,E2) and non-imaging (E3) configuration with linear read-out planes covering a wide energy range and absolutely calibrated charge response. Different levels of energy resolution are achieved as presented in the graph based on ray-tracing calculations in the mapped field. Shaded areas indicate the influence of vertical position errors of the incoming beam (±0.2 mm). X-rays emitted by the electron bunch are measured after separation from the electron beam behind the magnet.

at the lowest energies (below few MeV) significant background charge is present, presumably due to down-ramp injection at the end of the plasma source.

Characterization of not only a wide range of electron energies in single-shot but also of pulse duration is mandatory for the characterization of LWFA pulses for peak current sensitive applications in radiation sources, in particular in compact undulator based [31] FELs and optical undulators [32, 33]. Figure 7 shows a typical reference setup for the longitudinal characterization of electron bunches. Measurement of differential charge relies on the optical read-out of Lanex-type phosphorescing screens, which for the study presented here have been systematically cross-

calibrated against well-defined bunches of the ELBE accelerator. Energy resolution well below the typical percent-level energy spread (lower Figure7) can easily be reached by placing sets of linear (Lanex-) screens in the imaging and non-imaging planes of the spectrometer after modelling.

Laboratory generated high peak current bunches as presented above with estimated peak currents of $\sim$ 50 kA [9] and a spectral charge density of around 10 pC/MeV are not only of interest for driving compact light sources ranging from the far infrared THz to the X-ray region. They further open a path to the investigation of fundamental aspects [34] of beam driven plasma accelerators [35] independent from large scale infrastructure.

5. Acknowledgement

J.P.C. & J.M.K. acknowledge LA3NET (No. 289191) from the EU 7th Framework Programme. The work has been partially supported by Horizon 2020 LASERLAB-EUROPE / LEPP (Contract No. 654148) and EUCARD2 (No. 312453). M.G. and A.H. acknowledge support from the European Cluster of Advanced Laser Light Sources EUCALL (No. 65422).

6. References

[1] Siebold M *et al.* 2013 PEnELOPE: a high peak-power diode-pumped laser system for laser-plasma experiments *Proceeding SPIE* **8780** 878005
[2] Petit V *et al.* 2014 CW and tunable laser operation of Yb^{3+} doped CaF_2 *Applied Physics* B **78** 681
[3] Siebold M *et al.* 2009 Yb:CaF_2 a new old laser crystal *Applied Physics* B **97** 327
[4] Körner J *et al.* 2014 Spectroscopic characterization of Yb^{3+} doped laser materials at cryogenic temperatures *Applied Physics* B **75** 116
[5] Ledingham K *et al.* 2014 Towards Laser Driven Hadron Cancer Radiotherapy: A Review of Progress *Applied Sciences* **4** 402
[6] Zeil K *et al.* 2013 Dose-controlled irradiation of cancer cells with laser-accelerated proton pulses *Applied Physics* B **110** 437
[7] Hornung M *et al.* 2016 54J pulses with 18nm bandwidth from a diode-pumped chirped-pulse amplification laser system *Optics Letters* **41** 5413
[8] Zeil K *et al.* 2010 Scaling of proton energies in ultra-short pulse laser plasma acceleration *New Journal of Physics* **12** 045015
[9] Couperus JP *et al.* 2017 Demonstration of a beam loaded nanocoulomb-class laser wakefield accelerator (unpublished)
[10] Roedel C *et al.* 2011 High repetition rate plasma mirror for temporal contrast enhancement of terawatt femtosecond laser pulses by three orders of magnitude *Applied Physics* B **103** 295
[11] Köhler A *et al.* 2016 Single-shot betatron source size measurement from a laser-wakefield accelerator *Nuclear Instruments and Methods* A **829** 265
[12] Jochmann A *et al.* 2013 High Resolution Energy-Angle Correlation Measurement of Hard X Rays from Laser-Thomson Backscattering *Physical Review Letters* **111** 114803
[13] Macchi A, Borghesi M and Passoni M 2013 Ion acceleration by superintense laser-plasma interaction *New Journal of Physics* **85** 751
[14] Schreiber J, Bolton PR and Parodi K 2016 Hands-on laser-driven ion acceleration: A primer for laser-driven source development and potential applications *Review of Scientific Instruments* **87** 071101
[15] Borghesi M and Schramm U 2016 Summary of Working Group 2: Ion beams from plasmas *Nuclear Instruments and Methods in Physics Research* A **829** 137
[16] Kluge T *et al.* 2012 High proton energies from cone targets: electron acceleration mechanisms *New Journal of Physics* **14** 023038
[17] Jung D *et al.* 2013 Beam profiles of proton and carbon ions in the relativistic transparency regime *New Journal of Physics* **15** 123035
[18] Wagner F *et al.* 2015 Simultaneous observation of angularly separated laser-driven proton beams accelerated via two different mechanisms *Physics of Plasmas* **22** 063110
[19] Wagner F *et al.* 2016 Maximum Proton Energy above 85 MeV from the Relativistic Interaction of Laser Pulses with Micrometer Thick CH2 Targets *Physical Review Letters* **116** 205002
[20] Metzkes J *et al.*, 2014 Experimental observation of transverse modulations in laser-driven proton beams *New Journal of Physics* **16** 023008

[21] Passoni M *et al.* 2009 Proton Maximum Energy Cutoff Scaling Laws For Bulk Targets *AIP Conference Proceedings* **1153** 159
[22] Green JS *et al.* 2014 High efficiency proton beam generation through target thickness control in femtosecond laser-plasma interactions *Applied Physics Letters* **104** 214101
[23] Ogura K *et al.* 2012 Proton acceleration to 40 MeV using a high intensity, high contrast optical parametric chirped-pulse amplification Ti:Sapphire hybrid laser system *Optics Letters* **37** 2868
[24] Kim IJ *et al.* 2013 Transition of proton energy scaling using an ultrathin target irradiated by linearly polarized femtosecond laser pulses *Physical Review Letters* **111** 165003
[25] Bin JH *et al.* 2015 Ion acceleration using relativistic pulse shaping in near-critical-density plasmas *Physical Review Letters* **115** 064801
[26] Buffechoux S *et al.* 2010 Hot electrons transverse refluxing in ultraintense laser-solid interactions *Physical Review Letters* **105** 015005
[27] Zeil K *et al.* 2014 Robust energy enhancement of ultrashort pulse laser accelerated protons from reduced mass targets *Plasma Physics and Controlled Fusion* **56** 084004
[28] Esarey E, Schroeder CB and Leemans WP 2009 Physics of laser-driven plasma-based electron accelerators *Review of Modern Physics* **81** 1229
[29] Pukhov A and Meyer-ter-Vehn J 2002 Laser wake field acceleration: the highly non-linear broken-wave regime *Applied Physics* B **74** 355
[30] Mirzaie M *et al.* 2015 Demonstration of self-truncated ionization injection for GeV electron beams *Scientific Reports* **5** 14659
[31] Eichner T *et al.* 2007 Miniature magnetic devices for laser-based, table-top free-electron lasers *Physical Review ST Accelerators and Beams* **10** 082401
[32] Debus A *et al.* 2010 Traveling-wave Thomson scattering and optical undulators for high-yield EUV and X-ray sources *Applied Physics* B **100** 61
[33] Steiniger K *et al.* 2014 Optical free-electron lasers with Traveling-Wave Thomson-Scattering *Journal of Physics* B **47** 234011
[34] Chou S *et al.* 2016 Collective Deceleration of Laser-Driven Electron Bunches *Physical Review Letters* 117 144801
[35] Heinemann T *et al.* 2017 Investigating the key parameters of a staged laser- and particle driven plasma wakefield accelerator experiment *Proc. 8th Int. Particle Accelerator Conf. (IPAC17) Copenhagen Denmark* TUPIK010