The leak location package for assessment of the time-frequency correlation method for leak location

V A Faerman[1], A G Cheremnov[2], V S Avramchuk[3], and D V Shepetovsky [4]

Tomsk Polytechnic University, 30, Lenina Ave., Tomsk, 634050, Russian Federation

E-mail: [1]vaf@tpu.ru, [2]8xandr@gmail.com, [3]avs@tpu.ru, [4]dshepet@tpu.ru

Abstract. The paper describes the simplest implementation of a software and hardware package for acoustic correlation leak location and results of its performance assessment for location of water leaks from a metallic pipe in laboratory conditions. A distinctive feature of this leak locator is the use of the software based on the time-frequency correlation analysis of signals, which was proposed in our previous papers. Comparative analysis results are given for the information content of classical and time-frequency cross-correlation functions as obtained during processing of experimental data. The results obtained justify comparatively higher efficiency of a time-frequency cross correlation method to solve the leak location task. Improved efficiency is determined by bandpass filtration embedded into the time-frequency cross-correlation function calculation.

1. Introduction

The housing and utilities sector constitutes an important part of any modern national economy. This importance is caused by heat and water supply being basic needs of any modern citizen. Due to an enormous number of customers municipal services rely on a complex infrastructure and employ numerous specialists. In particular, in Russia alone there are about 900 thousand km of underground water pipes currently in operation [1].

Efficient operation of the pipeline infrastructure is a complex and important task. Studies performed in Germany [2], USA [2] and Russia [1] show that loss of water during transportation may well reach 30% of the original volume. There are multiple factors causing this situation, including a high degree of wear in pipelines, practical impossibility of its simultaneous replacement and complexity of routine repair works due to prevalence of underground piping.

Timely detection and location of leaks are a precondition for fast damage control and mitigation. Multiple methods have been developed and are currently in use to perform this task, a prominent place among them is held by an acoustic correlation method, based on acquiring and correlation processing of acoustic emissions caused by leaking liquid.

The efficiency of this method when applied to location of leaks is largely determined by efficiency of digital signal processing algorithms used and their software implementations [3]. Thus, mathematical methods and algorithms implemented in the software have a significant influence on the accuracy and fidelity of leak location.

To assess effectiveness and efficiency of both hardware and software of correlation leak locators, there are several approaches, including processing of software-generated signals [3], use of the software and hardware virtual pipe [4], lab-based and field testing [5].

Content from this work may be used under the terms of the Creative Commons Attribution 3.0 licence. Any further distribution of this work must maintain attribution to the author(s) and the title of the work, journal citation and DOI.
Published under licence by IOP Publishing Ltd

This paper considers the simplest implementation of the software and hardware leak seeker package developed to assess and study time-frequency correlation analysis of signals as applied to the leak location task. The principal goal of the laboratory research is to confirm the efficiency of the method, as previously detailed in a computational experiment [3]. Another objective of the work is to validate feasibility of a fully-functional software solution for leak locators implementing this method to find leak signals.

2. An acoustic correlation method of leak location

An acoustic correlation method of location was developed in the second half of the 20th century to solve the task of on-the-spot location of breaches in pipe walls to perform timely repairs [6, 7]. The method is based upon receipt of acoustic waves emitted when the liquid under pressure escapes the pipe by means of two acoustic transducers and the subsequent estimation of delay in the signals arriving through different measuring channels [7].

2.1. Principle of leak location

Principal sources of acoustic signals are turbulent fluctuations which accompany fluid outflow and cavitation (formation and collapse of gas bubbles) in leak localities due to a high local reduction of liquid pressure [8]. It worth noting that despite the fact that signals generated by the leak are weak with respect to the noise created by the continuous flow of liquid, correlation analysis makes it possible to extract information about location of the leak even when receivers are at a distance of hundreds of meters [9].

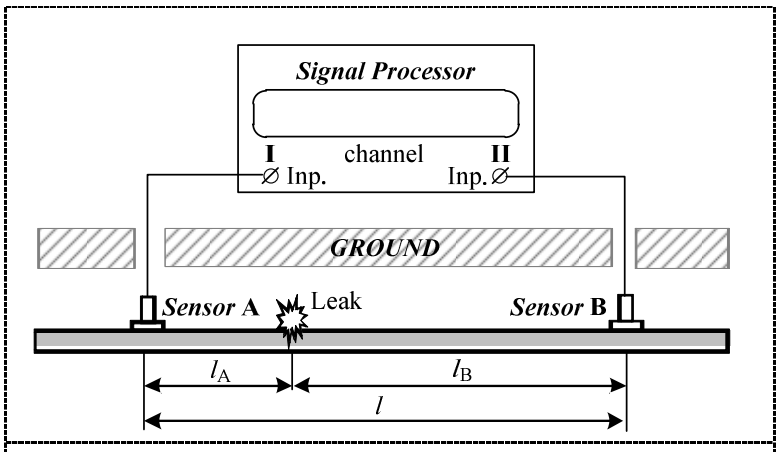

Figure 1. Leak location with an acoustic correlation method.

A pipeline section with equipment necessary for leak location with the acoustic correlation method is shown in Figure 1. The distance from the leak to any of the sensors (l_A and l_B) is found with formula

$$l_{A,B} = \frac{l \pm \tau_{leak} \cdot v}{2}, \tag{1}$$

where τ_{leak} - delay time of the leak acoustic signal, v - signal propagation speed along the pipeline axis, l – distance between the sensors.

2.2. Signal processing for leak location

Accuracy of leak location as per (1), depends on accuracy of τ_{leak} estimation and accuracy of v evaluation. It worth noting that for both τ_{leak} estimation [3,7,10], and v evaluation [11], there are different methods available. However, from a methodical point of view, τ_{leak} estimation is of more interest because the value of v is usually held as reproducible [4]. Modern leak location packages

reduce τ_{leak} estimation to a digital signal processing problem which is then solved by a specialized software.

Correlation analysis is a traditional mathematical tool for this task [7, 8]. In general, the analysis is calculation of the cross correlation functions (CCFs) of the studied signals and finding its peak value corresponding to the target value of delay.

At that, CCF calculation may be performed for the time domain [12], as well as for the frequency domain, as per Correlation Theorem [12, pp. 267-270]. However, the second way finds more practical application due to providing better speed when used with modern microprocessor equipment [12]. Thus, CCF computation is usually performed as per

$$r(\tau_j) = F^{-1}\left[F\left(y(t_i)\right)\cdot F^{*}\left(x(t_i)\right)\right], \tag{2}$$

where F is direct discrete Fourier transform (DFT) of digitized signal $x(t_i)$, F^{*} is a complex conjugate of direct DFT results $y(t_i)$, F^{-1} - inverse DFT.

3. A software and hardware package of the leak locator

To assess the software developed around time-frequency correlation analysis (FTCA) [6], a prototype leak locator was built. It is characterized by simple design, low cost and flexibility for experimenting. The latter is achieved by means of separation of data acquisition and data processing functionality and their implementation as separate units as per diagrams, shown in Figures 2 and 3.

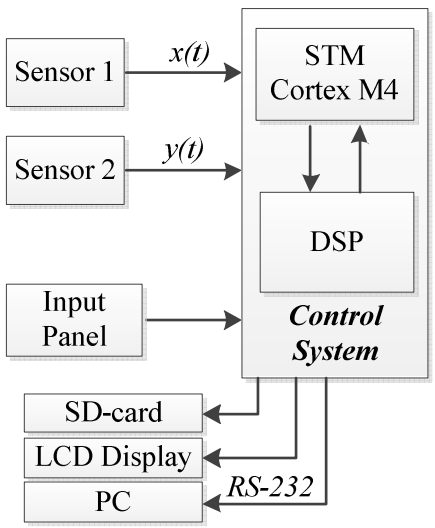

Figure 2. The functional diagram of the Data Acquisition Unit.

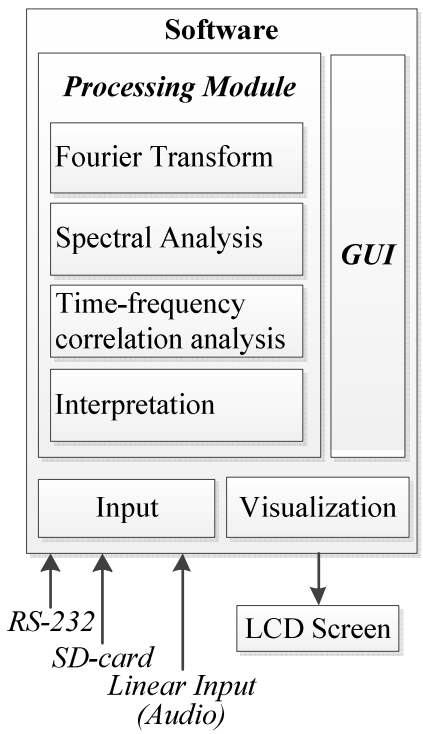

Figure 3. The functional diagram of the software of the Processing Unit.

As shown in the diagram above, a STM32 Cortex M4 microcontroller-based portable device provided with piezoelectric accelerometers DN-3 is used to acquire the signals. Layout of the portable device is shown in Figure 4.

Figure 4. The data Acquisition Unit (without sensors).

Data processing is provided by an external Processing Unit with the custom software preinstalled. The software is not limited to calculation of time-frequency CCFs, but allows one to use classical methods of spectral and correlation analysis. Necessary interface and visualization were designed and implemented in the software as well. This work used a Lenovo Yoga Tablet 2 tablet PC as the Processing Unit (shown in Figure 5).

Figure 5. Lenovo Yoga Tablet 2 with the preinstalled software.

4. Leak locator assessment

4.1. Experiment description

A series of experiments to locate leaks on a 18 m steel pipe with 30 mm diameter and 2 mm wall thickness was performed with the prototype described above. Three holes were made into the pipe (2, 4 and 6 meters from one of the pipe ends) to model leaks. In each experiment, two holes out of three

were covered with tight clamps completely stopping the fluid outflow. The fluid pressure was created with a water pump.

Recording of acoustic signals coming from sensors was performed with the device described above. Waveform Audio File Format was selected to store the signals and pass them to processing. Thus, raw data at the processing stage were represented by *.wav* files with the following parameters: channels – 2, bit depth – 8, sampling rate – 44100 per second.

4.2. Information content assessment method

As noted above, a sufficient condition for leak location would be discernibility of the correlation function peak which arises due to noises generated by the outflowing liquid. To assess information content of the CCF, i.e., discernibility of its peak, a quality coefficient may be used [13]

$$Q_{CCF} = \frac{N \cdot r(\tau_{leak})}{\left(\sum_{j=0}^{N-1} r(\tau_j)^2 \right)^{0.5}} \tag{3}$$

where N is number of CCF tic marks, $r(\tau_{leak})$ is the value corresponding to the leak signal. It is worth noting that coefficient $Q_{TF\ CCF}$ similar to (3) may be used for assessment of information content of the time-frequency CCF as well, as calculated with the algorithm given in [6].

4.3. Results and Discussion

Signal analysis used 5 seconds of audio recordings. The DFT window width was constant at 16384 tics. As per algorithm in [6], calculation of time-frequency CCF used the different number of non-overlapping frequency bands *M*: 20 (which corresponds to the width of a single frequency band of 1102 Hz) and 40 (width of 551 Hz). Results of the information content assessment are given in Table 1.

Table 1. Comparison of the information content in CCF and time-frequency CCF

Leak Position (m)	Q_{CCF}	$Q_{TF\ CCF}$ (M=20)	$Q_{TF\ CCF}$ (M=40)
2, 14	18.154	43.333	52.446
4, 12	12.133	24.576	27.078
6, 10	16.104	30.987	35.872
7, 9	16.322	34.336	42.756

From the results given in the table, we may draw a conclusion that filtration embedded into the time-frequency CCF algorithm provides better discernibility of the leak-caused correlation peak.

It is necessary to note that this information content is also influenced by the width of frequency bands, the highest information content corresponds to the case where the frequency band of the leak signal completely coincide with one of the time-frequency CCF frequency bands. The last fact is of special importance for development of formal criteria and algorithms aimed at automated detection and location of leaks.

5. Conclusion

The work describes implementation of the simplest software and hardware implementation for the acoustic correlation leak location and its application to the experimental location of pipeline leaks in laboratory conditions.

Distinctive features of the designed device are its simplicity and wide availability of components, as well as flexibility of the assembly necessary for laboratory studies of efficiency of algorithmic and software solutions used in the leak locator.

The leak locator was used for assessment of the previously proposed software solution for analysis of acoustic signals of the leaks based upon application of the original mathematical method of time-frequency CCF. The obtained results support applicability of the software and demonstrate high efficiency of the tested software in leak location tasks.

Advantages provided by time-frequency CA are deemed significant for location of leaks with the help of acoustic control means. Thus, the development of the software with functionality beyond a set of common signal analysis methods in frequency and time domains and including time-frequency correlation analysis appear an important task.

Acknowledgement

The reported study was funded by the Russian Foundation for Basic Research according to research project No. 16-37-00049 мол_а.

References

[1] Primin O G and Khramenkov S V 2012 The problems and ways of reducing water loses *Vodosnabzhenie i sanitarnaya tekhnika* **11** 31-37

[2] Martini A, Troncossi M and Rivola A 2015 Automatic leak detection in buried plastic pipes of water supply networks by means of vibration measurements *Shock Vib.* 165304

[3] Avramchuk V S and Goncharov V I 2013 Time-frequency correlation method for improving the accuracy in detecting leaks in pipelines *Adv. Mat. Res.* **650** 443-446

[4] Brennan M J, Kroll de Lima F, de Almeida F C L, Joseph P F and Paschoalini A T 2016 A virtual pipe rig for testing acoustic leak detection correlators: proof of concept *Appl. Acoust.* **102** 137-145

[5] Lapshin B M, Ovchinnikov A L and Chekalin A S 2011 Features of the search for leaks in pipelines of heat networks using the acoustic-emission method *Russ. J. Nondestruct+* **47(10)** 710-717

[6] Faerman V, Avramchuk V, Luneva E and Cheremnov A 2014 Prospects of frequency-time correlation analysis for detecting pipeline leaks by acoustic emission method *IOP C. Ser. Earth Env.* **21(1)** 12041

[7] Anway A R 1978 Method and apparatus for detecting and locating fluid leaks *US Patent* 4083229 A

[8] Fuller C R and Fahy F I 1982 Characteristics of wave propagation and energy distributions in cylindrical elastic shells filled with fluid *J. Sound Vib.* **81(4)** 501-518

[9] Fuchs H V and Riehle R 1991 Ten years of experience with leak detection by acoustic signal analysis *Appl. Acoust.* **33(1**) 1-19.

[10] Wen J, Li P and Wen Y 2007 A new method for unbiased time-delay estimation in noisy environment *Int. J. Adapt. Control* **21(7)** 623-634

[11] Li S, Wen Y, Li P, Yang L and Yang J 2014 Determination of acoustic speed for improving leak detection and location in gas pipelines *Rev. Sci. Instrum.* **85(2)** 024901

[12] Ifeachor E C and Jervis B W 2001 *Digital Signal Processing: A Practical Approach* (New Jersey: Prentice Hall) p 878

[13] Ionel R, Ionel S, Bauer P and Quint F 2014 Water leakage monitoring education: cross correlation study via spectral whitening *Proc. of Int. Conf. of IEEE Industrial Electronic Society* (24 February Dalas, USA) pp 2465-2471