R744 ejector technology future perspectives

Armin Hafner[1] and Krzysztof Banasiak[2]
[1] NTNU (Norwegian University of Science and Technology),
7491 Trondheim, Norway
E-mail: Armin.Hafner@ntnu.no
[2]SINTEF Energy Research, 7465 Trondheim, Norway
E-mail: Krzysztof.Banasiak@sintef.no

ABSTRACT

Carbon Dioxide, CO_2 (R744) was one of the first commonly applied working fluids in the infancy of refrigeration more than 100 years ago. In contrast to ammonia it mainly disappeared after the first generation of synthetic refrigerants have been introduced to the market after 1930. One reason was that the transition from low-rpm belt driven compressors towards the direct electrical motor driven compressors (50-60 Hz) was not performed for CO_2 compressors before the revival introduced by Gustav Lorentzen in the 90is of last century. Since 1988 an enormous R & D effort has been made to further develop CO_2 refrigeration technology in spite of the opposition from the chemical industry.

Today CO_2 refrigeration and heat pumping technologies are accepted as viable and sustainable alternatives for several applications like commercial refrigeration, transport refrigeration, vehicle air conditioning & heat pumping, domestic hot water heat pumps and industrial applications. For some applications, the current threshold to introduce R744 technology can be overcome when the system design takes into account the advantage of the thermo dynamical- and fluid properties of CO_2. I.e. the system is designed for transcritical operation with all it pros and cons and takes into consideration how to minimize the losses, and to apply the normally lost expansion work. Shortcut-designs, i.e. drop in solutions, just replacing the H(C)FC refrigeration unit with an CO_2 systems adapted for higher system pressures will not result in energy efficient products. CO_2 systems do offer the advantage of enabling flooded evaporators supported with adapted ejector technology. These units offer high system performances at low temperature differences and show low temperature air mal-distributions across evaporators.

This work gives an overview for the development possibilities for several applications during the next years. Resulting in a further market share increase of CO_2 refrigeration and heat pump systems, as energy efficient alternatives to current systems not applying natural working fluids.

1. Introduction

Globally, the number of heat pumping equipment in operation is growing and its energy demand, due to rising living standards across the world. Currently about 15% of the global electric is used by heat pumping devices. These units are vital means to realize fundamental needs of humans regarding thermal comfort, water heating, food security & conservation, and healthcare.

The European F-gas regulation EU 517/2014 will boost the uptake of sustainable refrigeration and heat pumping technology applying natural working fluids (NWF). Vendors within this industrial sector, able to introduce high energy efficient refrigeration and heat pumping systems utilizing NWFs, will have a significant competitive advantage on the European and global markets. As indicated earlier by Lorentzen [15] there is always a risk of creating harmful effects to the environment when synthetic refrigerants are lost to the atmosphere. Humans do have a long record list with new chemicals believed to be a benefit to mankind turned out to be environmentally unacceptable; examples are DDT, PCB, Pb, CFC's, HCFC's and nowadays HFC's. As mentioned by Lorentzen [15], in this situation, when

Content from this work may be used under the terms of the Creative Commons Attribution 3.0 licence. Any further distribution of this work must maintain attribution to the author(s) and the title of the work, journal citation and DOI.
Published under licence by IOP Publishing Ltd

current synthetic refrigerants are being banned by international agreements it does not seem very logical to try to replace them by another family of related halocarbons, equally foreign to nature. Therefore all R&D effort should be directed towards identification of alternative natural working fluids and systems configurations within the different sectors. Beside cost issues, energy efficiency should be the main parameter within the decision process. Technically, 99 % of the currently applying HCFC and HFC systems can be converted to equally or even more energy efficient units using NWF's. As shown by several countries across the globe, governmental restrictions & taxes related to the use of halocarbons, introduce an environmental cost factor for the end-user. These extra costs create the necessary momentum for the uptake of the next generation refrigeration and heat pumping technology applying NWF's. This does not mean that the total cost of new refrigeration technology will be higher compared to current technologies in the long run. When the market is requesting these systems, and different vendors adopt the knowhow, competition and increasing production numbers will result in lower total investment and life cycle costs for the end-users.

The choice of refrigerant in itself is of course not a sufficient criterion for choosing an environmentally benign solution. Indirect emissions due to power production make energy efficiency of the system over the lifetime very important, as well as associated emissions during refrigerant and system production. The fact that the power production moves towards decarbonisation, however, will make the relative contribution from refrigerant emissions higher and higher. Therefore an in depth analysis of the life cycle climate performance (LCCP) of systems is necessary instead of a simple total equivalent warming impact (TEWI) analysis. The global warming potential (GWP) number of refrigerants, which represents a reference number related to equivalent carbon emissions within a certain time interval, will not be the only criterion anymore in the near future. Instead, documentation of the system performance and its energy usage are criteria’s to be documented by the manufacturer, since they do have a significant impact on operation cost of the customers.

The most significant sectors and the perspectives of CO_2 to become an important working fluid will be described in this paper.

2. Main refirgeration and heat pumping sectors

This chapter describes some certain sectors where CO_2 vapour compression technology is successful; however, this does not exclude the sectors not mentioned to be a potential application area for CO_2 refrigeration technology in the future.

2.1 Commercial Refrigeration

Beverages and food to be sold in shops off all sizes have to be stored and displayed at various temperature levels. Fresh food and beverages require temperatures just a few Kelvin above the freezing temperature of water, while frozen foodstuff is stored and displayed at around -20 °C. The smallest standalone units require a few hundred Watts of electricity, while Hypermarkets do have installed cooling capacities of up to 1,500 kW. The average annual refrigerant leakage rates from the commercial refrigeration sector in Europe are in the range of 15-20 % of the total charge, mainly HFC-404A. Worldwide the figure is about 30 % and HCFC-22 being the main refrigerant in use.

2.1.1 Supermarket Refrigeration

The end-users of the refrigeration equipment are more and more aware of the carbon footprint, energy consumption and general environmental impact of their business. As a consequence the number of transcritical commercial refrigeration units (~5000_{2015}) is fast increasing in Europe[1] and other areas are following. The vendors are trying to develop standard solutions to achieve cost advantages by

[1] www.shecco.com

producing more similar units. As current CO_2 commercial systems for supermarkets are energy efficient in most European regions efficiency enhanced system configurations have to be developed to open up the market for CO_2 commercial refrigeration technology in Southern Europe and other parts of the world with hot climates.

When operated at ambient temperature above 22-26 °C the non-enhanced systems do have a slightly lower COP compared with state of the art HFC-404A commercial units, meaning that the peak power demand may be higher.

As described by *Hafner et al.* [10], CO_2 ejector supported units with parallel compression do have the highest energy efficiency advantage compared to HFC-404A units, followed by a standard booster system equipped with an external mechanical subcooling system.

The first pilot installations of the various alternative CO_2 system solutions described by *Hafner* [10] are in operation across *Europe*, [11], [17], [26]. Important practical knowledge is available, i.e. the decision makers within the leading equipment manufactures can decide which will be the preferred and saleable solution for Southern Europe, Asia and America, i.e. regions with high ambient temperature conditions.

Wiedenmann et al. [26] presented measurement results (figure 1) from a Swiss supermarket equipped with two identical CO_2 ejector supported parallel compression units. Each systems has five on/off controlled ejectors, two for liquid pumping and three to pre-compress the vapour form evaporator exit towards the separator. During the first period (15.10.-2.11.), the ejectors have not been utilized. The two systems had an energy usage which differed by 5 % due to different cooling load requirements. During the second period (03.11.-17.11.) only unit B applied expansion work recovery due to several ejectors in parallel. The energy consumption was reduced by 20 %, when the ejectors have been utilized, compared to a parallel compression unit as the baseline installation.

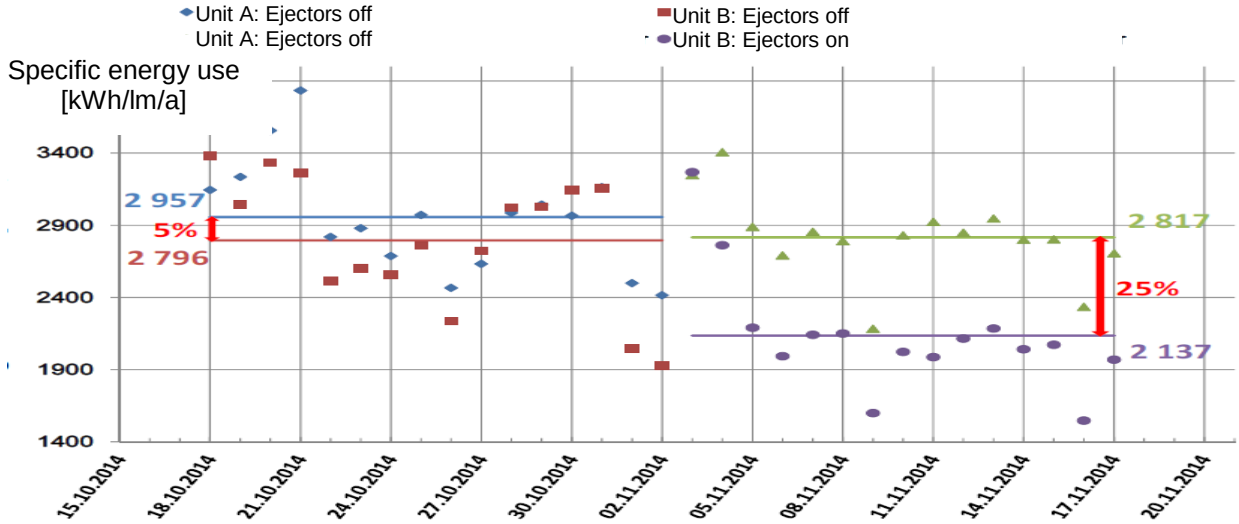

Figure 1. Energy consumption of two identical parallel compression systems with ejector support installed in a Swiss supermarket (Ibach).

The integrated approach for future CO_2 supermarket systems mean the integration of all heat transfer functions of a supermarket building integrated into the CO_2 pack. This is very favourable for systems in the warm climate regions, to become cost competitive. CO_2 is the preferred refrigerant for many new supermarket installations wherever the end-users can find skilled vendors able to implement and

service these units. For commercial refrigeration applications in warm climates, ejector systems enabling flooded evaporator operation all year long are commercially available. The first pilot systems applying additional compressor unloading by pre-compressing of medium pressure vapour from chilled food display cabinets, as shown in figure 3, have been successfully operated for several years in Switzerland. For traditional ejector cycles, where all the vapour from the evaporators has to be sucked by the compressor, proper lubricant return can be a challenge. However, this problem has been solved.

Applying ejectors does not mean to neglect the traditional high side pressure control to achieve maximum energy efficiencies. The ejector(s) must be able to control the high side pressure actively. Similar strategies as controlling the cooling capacity by adjusting the compressor displacement by either applying a frequency converter and/or apply several compressors in parallel can be applied also with ejectors. The usage of an adjustable ejector with variable position needle to control effective nozzle size and high side pressure is one way. However, as with frequency-controlled compressors, the efficiency and operating envelope of the adjustable ejectors are limited and reduced in off-design conditions. The multi-ejector concept, applying several fixed motive nozzles in parallel with binary-scaled ejector capacities, represents an alternative solution. Since 2014 this concept has been implemented in several pilot supermarkets.

The multi-ejector is an add-on enhancement technology especially for warm climates, denoted the third-generation CO_2 supermarket refrigeration systems, with a simplified circuit shown on the right hand side of figure 2. It enables increasing the energy efficiency at high ambient temperatures compared to a state of the art CO_2 booster system with parallel compression, denoted the second-generation CO_2 supermarket refrigeration systems, central circuit in figure 2. The parallel compression booster system represents a development step towards higher energy efficiency compared to the traditional booster systems with flash gas by-pass, denoted the first-generation CO_2 supermarket refrigeration systems, as shown on the left hand side in figure 2. The second and third generation are also opening for an efficient integration of the AC function often required for the buildings, even in the Northern part of Europe. However, in regions with very low ambient temperature during the winter season, it is advisable to split the gascooler, avoiding too low inlet temperatures to the high-pressure control devices.

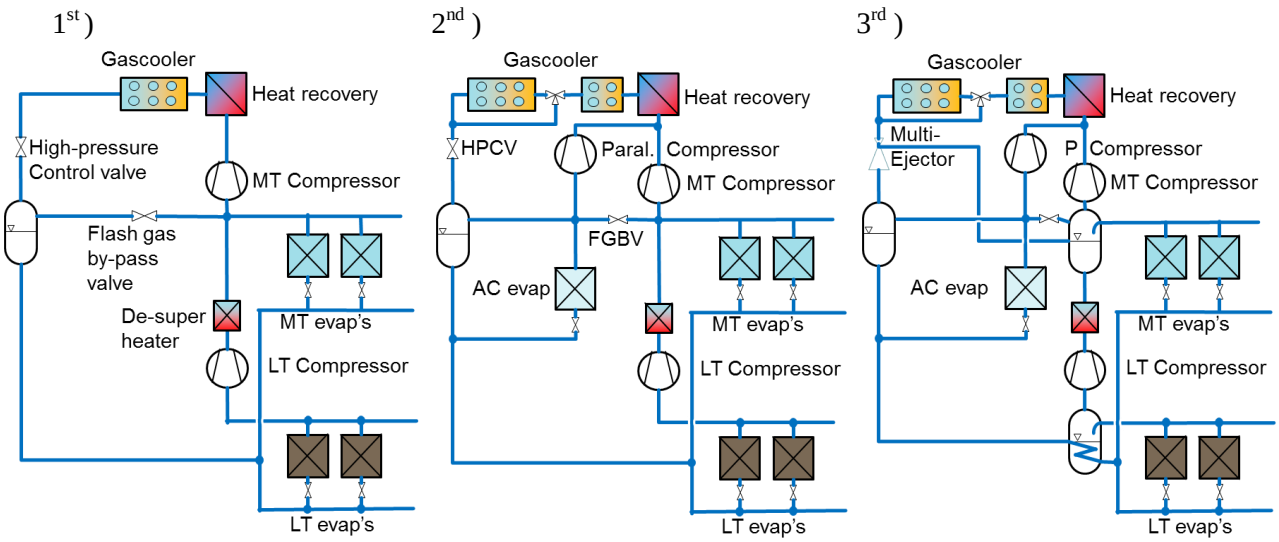

Figure 2. Principle circuit architecture of 1st , 2nd and 3rd generation all-CO_2 supermarket refrigeration systems

Based on the experimental investigations in laboratories and field tests of the CO_2 supermarket systems a seasonal energy efficiency improvement of 10% is obtained between the first and second generation. At high ambient temperature operation, another 20% improvement is achievable when adding the multi-ejector technology to a well-designed CO_2 parallel compression system.

For a successful and rapid implementation of CO_2 refrigeration also outside Central and Northern Europe, an acceptable total cost of ownership for the end-users is important. The 2nd and 3rd generation of CO_2 supermarket refrigeration systems enable a cost and energy efficient integration of other necessary functions needed in the supermarket, as air-conditioning at correct pressure levels enabled with the parallel compressor and hot water production, as shown in figure 2. As described by *Girotto* [5], direct heating and AC devices, not requiring water as a secondary fluid should be considered in the future, to further reduce the total cost of ownership for the end-users. When applying hot water production, the drawback of applying CO_2 having an increased exergy loss due to transcritical heat rejection compared to conventional condensers, is turned into a benefit. Conventional working fluids do have a challenge to produce 80-90°C water without auxiliary heating, which is not at all a problem for a CO_2 unit (see next chapter). Heat recovery for space heating, where needed, has been and will always be an integrated part of the refrigeration systems. This means that in the future the end-user and their service teams just need to maintain one single refrigeration system, applying only CO_2 as working fluid.

Asia: The typical refrigeration capacity of a condensing unit is in the range of 1 to 20 kW. Several display cabinets and/or AC indoor units are connected to these units, which explain their global popularity for small shops and convenience stores. Currently H(C)FC refrigerants are dominating this market segment, supported by the Asian manufactures of these units. However, there are no technical barriers which would exclude CO_2 refrigeration units to become an alternative working fluid for condensing units, In Japan, more than 1000 small supermarkets are successfully converted from HFC's to CO_2 during the past years, as described by *Uto* [24]. Energy savings of up the 27 % are reported by the end-users. A successful technology transfer has also taken place from Japan to Indonesia ([21], [24]). 12 pilot stores are equipped with the same CO_2 technology as in Japan, and their energy saving at these locations, very close the equator, are in the region of 20%, compared the conventional HFC systems. The stores in Indonesia had a 15 % higher turnover after the refurbishment

due to increased customer comfort, however, the investments cost for these new units are still relatively high, compared to traditional H(C)FC units. All these new Asian CO_2 units are integrated systems, i.e. the AC unit (and heating where needed) is part of the refrigeration unit. The maximum possible energy efficiency for these systems is not achieved, since they are still operated without ejector technology.

Innovation related to R744 units, developed towards high number serial production during the next years, will support to outperform commercial refrigeration units applying H(C)FC's not limited to the GWP issue due to system leakage. More important is the energy efficiency and the life cycle cost of these units, which have to run 24/7 for decades. The market share of the ejector enhanced CO_2 systems for supermarkets is expected to be between 50 to 80% for new installations in 2020.

2.2.2 Light commercial refrigeration units / standalone units

Self-contained refrigeration systems are the base equipment for standalone units which can be found all over the world form small shops to medium-size supermarkets. Beverage vending machines, ice-cream freezers and display cases represent the majority of this standalone equipment. F-gases are still applied by some customers for new equipment, while the trend is clear, natural working fluids are the preferred choice of the market players.

By early 2014, the *Coca-Cola Company* [2] had implemented more than 1 mill beverage coolers with CO_2 refrigeration technology in the market place. *Unilever* [23] has distributed more the 1.5 mill freezers applying hydrocarbons, while another 850.000 units will be ordered in 2015.

CO_2 refrigeration and heat pumping units might be the preferred choice in high end products, i.e. equipment which provides both hot and cold beverages. Cost restrictions are preventing from the introduction of energy efficient expansion work recovery technology, which would significantly reduce the energy consumption of CO_2 cooled vending machines.

2.2 Mobile Air-Conditioning

As a reaction to the Montreal Protocol, the use of CO_2 as an environmentally safe refrigerant in automobile air conditioning has been discussed for more than two decades [16]. This technology has several positive features as an air-conditioning system; however, the properties and characteristics of CO_2 may give even greater benefits in a reversible heating/cooling circuit (*Pettersen et al.* [20]). *Hafner et al.* [7] discussed some of the possibilities with a CO_2 -based automobile Heating, Ventilation and AC-system, based on a new system design.

This sector has gone through decades with periodic churning of many synthetic working fluids announced by various chemical companies to become the successor of HFC-134a. On the other hand, the competition between CO_2 and the synthetic fluids has resulted in significantly reduced leakage rates of the latest HFC systems and in a considerable (-50 %) decrease in the previous required fuel consumption for the AC units.

Hafner et al. [8] described that the test data from SAE AR CRP have reconfirmed that system energy efficiency is no argument against mobile CO_2 AC units. Fuel use of CO_2 systems is significantly lower than with HFC-134a, even in the warm climates. Another benefit of CO_2 is the potential for compact system design and the good properties CO_2 offers for using the system as a heat pump in reversed mode.

Wischollek et al. [25] performed thoroughly fuel consumption investigations of mobile AC systems for small vehicles as shown in figure 3.

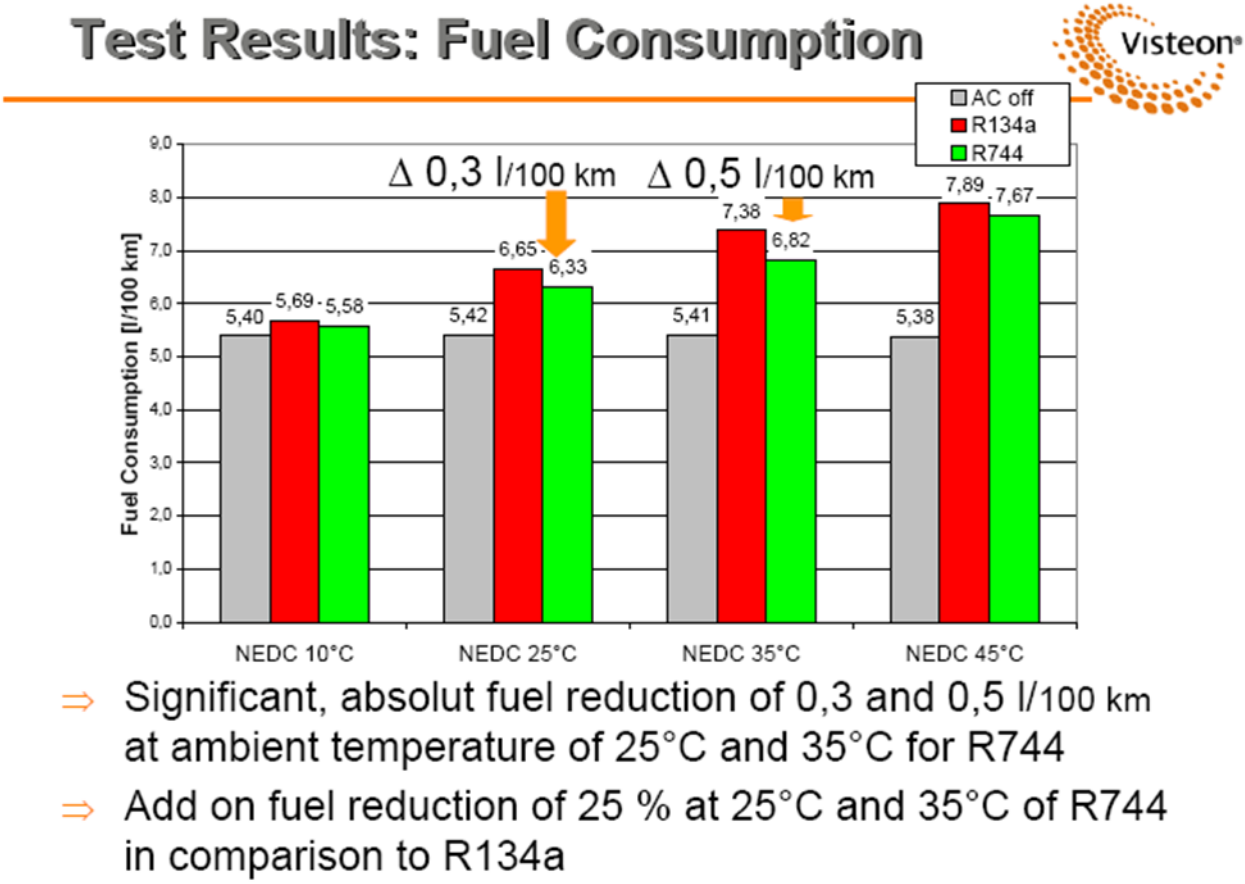

Figure 3. Fuel consumption of a Toyota Yaris (MY 2006) with different mobile AC systems when driving a New European Driving Cycle (NEDC) at various ambient temperatures, *Wischollek et al.* [25].

The measurement results in figure 3 show that a carefully designed CO_2 mobile AC system is able to perform at a high energy efficiency level, even in small cars and at high ambient temperatures.

Currently German suppliers for the automotive industry are able to provide compact CO_2 heat pump solutions, which also can be applied in hybrid or electric cars (*Hinrichs* [6]).

Despite the pressure form the chemical industry and their lobbyists in Brussel, central European car manufactures have declared that HFC's are not sustainable alternatives for their mobile AC systems in the long run. In close cooperation with supplies the serial production of CO_2 systems for cars will be achieved by 2017 (*Daimler* [3]), the sunset year of HFC-134a systems in new cars, as declared in the EU MAC directive. When the focus is turned towards improving the energy efficiency of mobile AC and heat pumping systems, CO_2 ejector technology will also be considered, since the potential expansion work recovery cannot be neglected in these systems. The ejectors due have a significant advantage compared to other expansion work recovery solutions, they do not need moving parts (reliability), can be produced cost efficient in large numbers and enhance the heat transfer in the evaporators.

2.3 Transport refrigeration

Chilled and frozen goods have to be transported from harvesting places and process plants to distribution centres and finally to shops. Containers, truck&trailers and vans are the most common transport devices which are able to maintain a certain temperature due to the incorporated refrigeration unit. There are similarities in system designs, and the several alternative working fluids are applied.

2.3.1 Containers

The leading container handling company is focusing on enabling hydrocarbons as the global working fluid for their fleet, *König et al.* [14]. *Carrier* [1] has developed CO_2 refrigeration units for containers, which are in the market place. There is a significant potential to improve the energy efficiency of these CO_2 refrigeration units, since no expansion work recovery devices are implemented so far. The potential is extra high, due to the relative high ambient temperatures these units are in operation when crossing the equator, i.e. ejector technology should be considered, even for the systems applying hydrocarbons, as describe by *Elbel and Lawrence* [4] for low pressure systems.

2.3.2 Truck & Trailer units

Currently none of these refrigeration units in the market place are available with NWFs. However, if compressor manufactures are willing to supply compact and high efficient multi stage compressors for this market segment, there are no further obstacles for a successful introduction of CO_2 refrigeration for Truck & Trailer units, as demonstrated by *Möhlenkamp* [18]. Figure 4 shows the COP of three alternative working fluids applied in two stage refrigeration cycles as currently implemented to maintain the conditions inside multi temperature chambers of trucks. At given load conditions, the CO_2 system requires less energy at ambient temperatures below 37°C, at higher ambient temperatures the other systems requires slightly less energy.

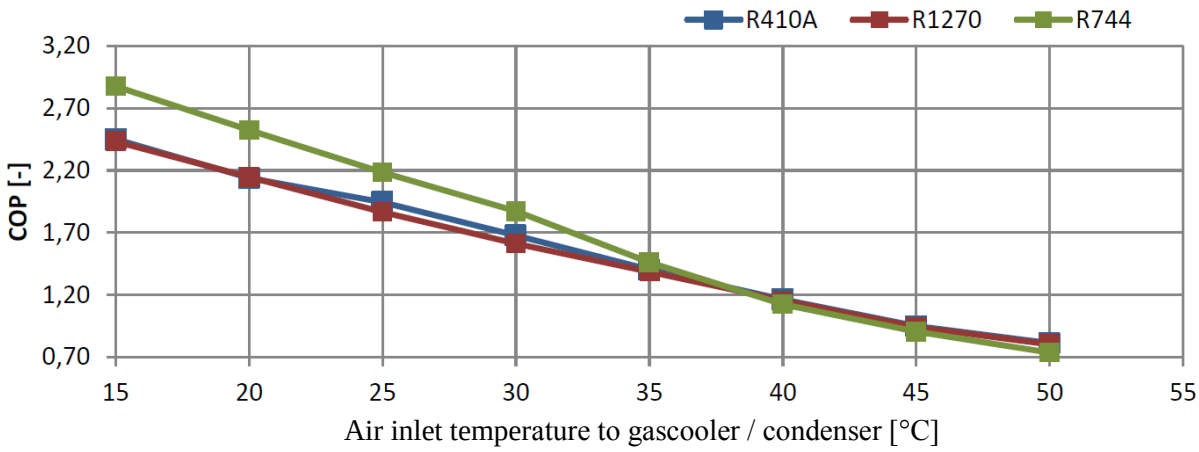

Figure 4. COP Comparison of two stage refrigeration cycles for medium- and low temperature applications. Temperature inside the freezing chamber -20°C at 8 kW and inside the chilled food chamber 0°C at 6.5 kW, *Möhlenkamp* [18].

Due to variations in load profiles, the annual energy consumption of R-1270 system is slightly more efficient than the current CO_2 configuration, as shown in figure 5. However, performance enhancement technologies like ejectors and flooded evaporation could and should be implemented in the next generation of CO_2 systems for trucks and trailers.

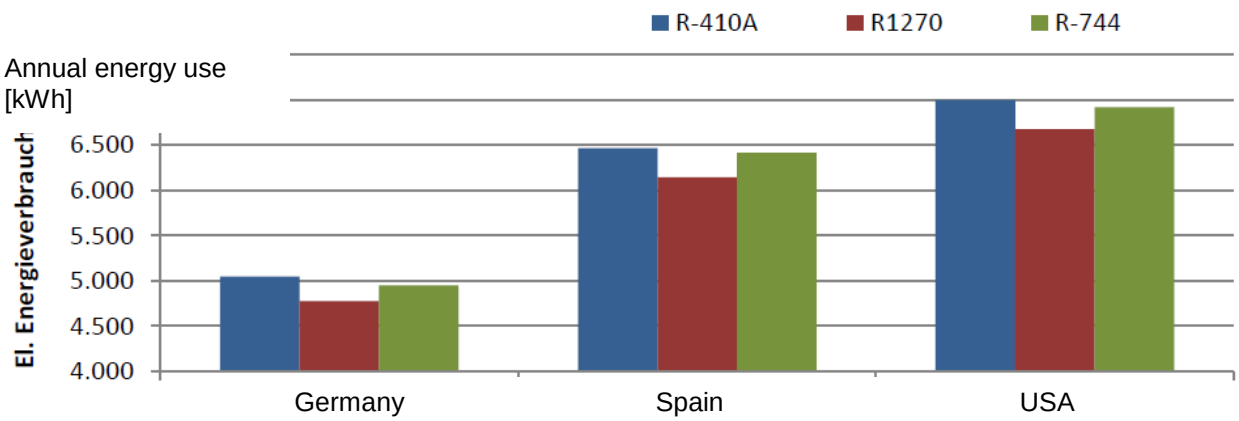

Figure 5. Annual energy use of two stage refrigeration transport refrigeration units (multi temperature trucks). Energy for cooling only, *Möhlenkamp* [18].

CO_2 systems able to provide both heating and cooling should be developed and implemented in transport refrigeration systems. There is a certain heating demand inside the boxes protecting the products from the outside environment, especially in the colder climate areas, when chilled products have to be transported and the ambient temperatures are far below the freezing point.

2.4 Water heating heat pumps

Heat pump water heaters, used for heating tap water typically from 10ºC to 75ºC, is an application very well suited for the transcritical CO_2 cycle (*Nekså et al.* [19]). After the initial development phase in the period 1990-98, successful commercialisation was made in Japan from 2001 with help of governmental incentives aiming to move water heating from fossil fuel heating to heat pumps. About 1.7 million units were installed between 2001 and 2008. By the end of 2013 4.0 million units[2] have been installed in Japan. A significant improvement of the systems has taken place since market introduction in 2001, to make the efficiency even higher (*Hashimoto* [12]). The improvements have been done both on components, such as compressors and heat exchangers, as well as introducing ejectors for energy recovery. Currently, seasonal performance factors are above 4. Systems both for residential, commercial and industrial use are now also introduced in Europe by several manufacturers. With the increasing importance of tap water heating due to less heating demand in low energy and plus energy buildings, this technology should have great prospects in Europe and North America, too.

2.5 Chillers

Chillers provide comfort AC in building complexes and commercial buildings. Mainly water is applied as the heat transfer fluid, cooled by the refrigeration unit and pumped through heat exchangers inside the ventilation system of the buildings. This sector is dominated by H(C)FC applications.

Jin et al. [13] investigated the AC application of CO_2 as a working fluid for a ground coupled heat pump (GCHP), i.e. a CO_2 chiller with heat pump options. The system utilises a combination of ambient air and ground as a heat sink in AC mode. Simulation results show that the hybrid system COP would be increased by 8%~20% depending on the capacity of the air-cooled gas cooler, comparing with a standard CO_2 chiller unit. An optimal averaged system COP of 3.45 is obtained when the air-cooled capacity is 30%~40%. An optimal operating pressure in the gas cooler is obtained at around 80bar at high ambient temperatures for the investigated system. The influence of the borehole depth was analysed and a heat flux range with 20 W/m~30W/m for the concerned borehole is

[2] Press release, 19.12.2013, of the Japan Refrigeration and Air Conditioning Industry Association

suggested to acquire a reasonable system COP. Expansion work recovery devices will be implemented in the next studies to further improve the total COP.

These kinds of CO_2 chiller units are especially attractive for buildings in regions with both AC and heating requirements; they are introduced in the northern European market. CO_2 chillers are able to generate hot water at temperatures above 65 °C, i.e. for integrated energy concepts CO_2 is an energy efficient chiller solution. For regions with higher ambient temperatures, equal enhancement strategies as applied in the supermarket refrigeration systems (ejectors) have to be applied to significantly increase the COP.

2.6 HVAC units for public transport vehicles

Hafner et al. [9] presented opportunities for the usage of CO_2 air conditioning system in public trains. These systems shall provide cooling in the summer and heating in the winter. Today 75% of the air conditioning systems in trains use HFC-134a as refrigerant (GWP of HFC-134a is 1410 $kg_{eq.CO2}$/kg) the remaining 25% apply HFC-407C (GWP: 1774 $kg_{eq.CO2}$/kg). Due to the enforcement and the resulting cost consequences of the European F-gas regulation, this sector has to find alternative working fluids. Flammable working fluids, even with a slow burning velocity, are not an option due to safety requirements inside tunnels and during rescue operations.

The principal CO_2 cycle with airflows in heating and cooling mode are shown in figure 6. Arrows below the heat exchanger pointing upwards indicates the airflow which enters the heat exchanger from the passenger compartment side, while the arrows pointing downwards indicate the airflows which enters the compartment. Arrows above the heat exchangers indicate the airflow from and to ambient.

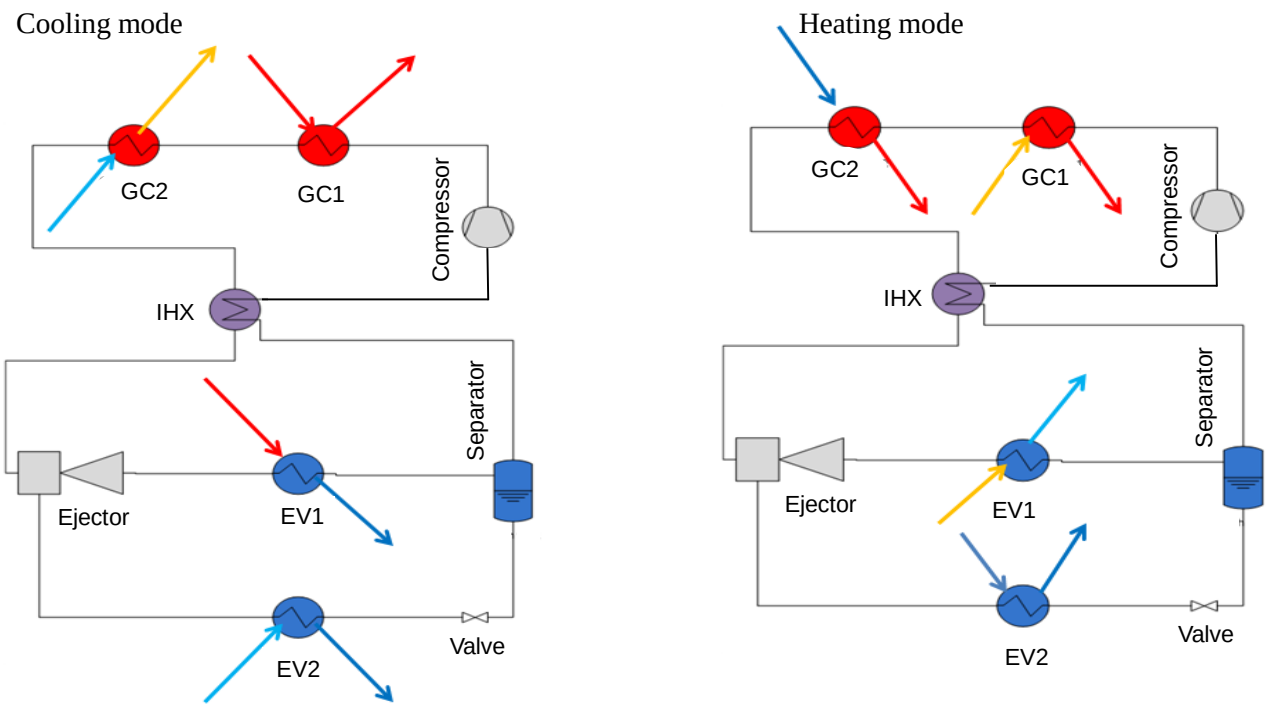

Figure 6. HVAC unit layout with ejector in heating & cooling mode, including corresponding air flows.

A dual ejector supported CO_2 HVAC unit, applicable for trains is shown in figure 7. It requires a 3-2 directional valve and a shut off valve to reverse the operation. The heat exchangers are divided into

two sections each. In AC mode (left) the air inlet part faces the saturation temperature of the interior heat exchanger operating as an evaporator at compressor suction level, while the second part (air outlet part) is at the ejector suction pressure level. The ejector downstream of the exterior heat exchanger is bypassed in AC mode. In heat pump mode, the air inlet part of the interior heat exchanger can be applied for dehumidifying the air on demand. The air inlet section of the exterior heat exchanger is at the saturation temperature level corresponding to the compressor suction pressure while the air outlet part can be further cooled by the refrigerant flow circulated through the suction port of the ejector at lower evaporation temperatures.

Cooling mode: Heating mode

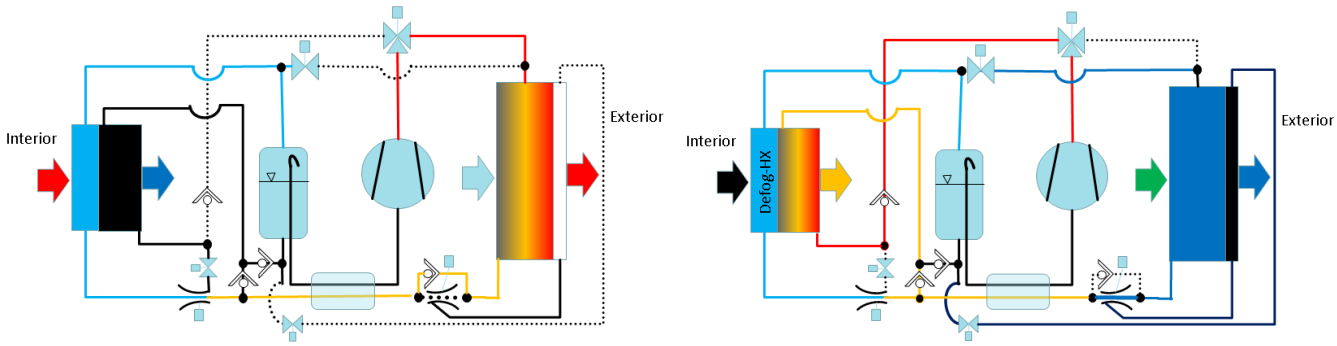

Figure 7. Circuit of a CO_2 HVAC unit for trains with ejector layout in the AC mode (left) and HP mode (right).

HVAC systems for public transport vehicles have to refurbished, potentially applying NWFs. Flammable alternatives are not applicable in this sector due to high risks related to accidents and the high number of people inside the passenger compartments. CO_2 systems will play an important role in this sector towards 2020.

2.7 Industrial refrigeration

Systems originally designed for HCFC 22 are still widely applied in industrial refrigeration applications across the globe. *Hafner* [11] reports from successful transformations of R22 units to CO_2 technology for applications within the fishery sector. As an example, a stern trawler got a new CO_2 deep freezing plant. The new CO_2 refrigeration system reduced the deep-freezing time by 25%. It required 20% less space on-board of the fishing vessel and has excellent part load performance (50% reduction in energy use). The CO_2 cooled plate freezers achieve better food quality, since the de-icing can be performed without boiling of the fish surface. This is reflected in the price of the fish the owner can achieve from the customers demanding now deliveries from this particularly trawler. The service and maintenance of the new systems is reported by the ship owner to be better and easier. Ejectors will play an important role in these kind of units, circulating the liquid refrigerant through the plate freezers, with a certain circulation rate.

Another vessel equipped by the same vendor with a CO_2 refrigerated sea water (RSW) unit was in operation around the Canarian Islands. Now this fishing vessel is in operation outside Mauretania, i.e. close to the equator, without any challenges related to the CO_2 refrigeration equipment.

3. Conclusions

A tremendous development of CO_2 technology has taken place since the revival of the refrigerant around 1990. The development has led to efficient CO_2 systems that have been introduced in the market, but also inspired developments for other technologies. Ongoing development in several applications and in development of components and novel system designs as ejectors are expected to enable commercialisation in several applications in the near future.

CO_2 systems do offer the advantage of enabling flooded evaporators supported with adapted ejector technology, which offers high system performances at low temperature differences and low temperature mal-distributions across evaporators.

Challenges exists in achieving energy efficiency and competitive system cost in some application areas. However, looking at the results achieved in the development so far and the considerable research and development effort ongoing, it is expected that these challenges may be overcome for many new applications. The focus on reducing GHG emissions and environmental aspects as such is also expected to further encourage increased use of NWFs in general and advanced CO_2 systems supported by ejectors in particular.

References

[1] Carrier 2015 http://www.carrier.com/container-refrigeration/en/worldwide/products/Container-Units/NaturaLINE/

[2] Coca-Cola company 2014 http://www.coca-colacompany.com/innovation/coca-cola-installs-1-millionth-hfc-free-cooler-globally-preventing-525mm-metrics-tons-of-co2

[3] Daimler 2015. https://www.daimler.com/documents/investors/nachrichten/kapitalmarktmeldungen/ daimler-ir-release-en-20151020.pdf

[4] Elbel S, Lawrence N 2016 Review of recent developments in advanced ejector technology *International Journal of Refrigeration* Vol. 62 pp 1-18

[5] Girotto S, 2016 Direct space heating and cooling with CO_2 refrigerant, a new solution for commercial buildings *Proc. from ATMOsphere Europe 2016*: http://www.atmo.org/media.presentation.php?id=754

[6] Hinrichs, J, 2011 Weniger Verbrauch, mehr Komfort: Effizientes Heiz-/Kühlsystem für Elektrofahr-zeuge. *Conference „Prima Klima im Auto: Wie wird die Klimaanlage zukunftsfähig?“,* Berlin

[7] Hafner A, Pettersen J, Skaugen G, Nekså P, 1998 An Automobile HVAC system with CO_2 as the refrigerant, *Proceedings of the 3rd IIR Gustav Lorentzen Conference (Natural Working Fluids '98),* Oslo, Norway

[8] Hafner A and Nekså P, 2006 Global environmental consequences of introducing R744 (CO_2) mobile air conditioning, *Proceeding of the 7th IIR Gustav Lorentzen Conference on Natural Working Fluids*, Trondheim, Norway, May 28-31, 2006

[9] Hafner A, Försterling S, Bø Andreassen H E, Walnum H T, 2011 Air reversing HVAC unit for public trains *Proceedings of the Int. Cong. of Refrigeration 2011,* August, Prague, CR

[10] Hafner A, Schönenberger J, Banasiak K, Girotto S, 2014 R744 ejector supported parallel vapour compression system *Proc. of the 3rd IIR Int. Conf. on Sustainability and the Cold Chain*, London, UK.

[11] Hafner A, 2016 Natural refrigerants, a complete solution – Latest technological advancements for warm climates. *Proc. from ATMOsphere Europe 2016*: http://www.atmo.org/media.presentation.php?id=738

[12] Hashimoto, K, 2006 Technology & market development of CO_2 heat pump water heaters (ECOCUTE) in Japan, *IEA Heat Pump Centre Newsletter*, Vol **24** No 3, pp 12-16

[13] Jin Z, Eikevik T M, Nekså P, Hafner A, Ding G, Hu H, Transient simulation of R744 hybrid ground coupled heat pump with modelica. *Proceedings of the 11th IIR Gustav Lorentzen Conference on Natural Refrigerants*, Hangzhou, China.

[14] König H and Bararu M 2014, Risk assessment for reefer containers with flammable refrigerants, *Proceedings of the 11th IIR Gustav Lorentzen Conf. on Natural Refrigerants*, Hangzhou, China

[15] Lorentzen, G 1995 The use of natural refrigerants: a complete solution to the CFC/HCFC predicament *Int. Journal of Refrigeration* 9. Vol. **18**, No. 3, pp 190 -197

[16] Lorentzen, G and Pettersen, J, 1992 New possibilities for non-CFC refrigeration. *Proceedings of the IIR Int. Symp. on Refrigeration, Energy and Environment,* Trondheim, Norway, June 22-24, pp 147-163

[17] Minetto S, Girotto S, Rossetti A, and Marinetti S, 2015 Experience with ejector work recovery and auxiliary compressors in CO_2 refrigeration systems Technological aspects and application perspectives *Proceedings of the 6th IIR Conference on Ammonia and CO_2 Refrigeration Technologies*, Ohrid, 2015

[18] Möhlenkamp, A, Lemke, N, Köhler, J, 2014 Vergleich von Kältemitteln für eine zweistufige Transport-Kälteanlage anhand ihrer Treibhausgasemissionen, *Proceedings of the DKV annual Meeting 2014,* Düsseldorf, Germany

[19] Nekså, P, Rekstad, H, Zakeri, G R and Schiefloe, P A 1998: CO_2 – Heat pump water heater: characteristics, system design and experimental results, *Int. Journal of Ref.* Vol. **21**, No. 3, pp. 172-179

[20] Pettersen, J, 1997 Experimental Results of Carbon Dioxide in Compression Systems *ASHRAE/NIST Conference Refrigerants for the 21st Century*. Gaithersburg, Maryland, USA

[21] Santoso Y, 2016 Alfamidi's Actions against Global Warming. *Proceeding from ATMOsphere Asia 2016*: http://www.atmo.org/media.presentation.php?id=702

[22] Sawalha, S, 2013 Investigation of heat recovery in CO_2 trans-critical solution for supermarket refrigeration, *Int. Journal of Refrigeration* Vol. **37** 145-156

[23] Unilever 2015: http://www.unilever.com/sustainable-living-2014/reducing-environmental-impact/greenhouse-gases/climate-friendly-refrigeration/

[24] Uto S., 2016. Lawsons's Actions against Global Warming. Proceeding from ATMOsphere Asia 2016: http://www.atmo.org/media.presentation.php?id=703

[25] Wieschollek F and Heckt R, 2007 Improved Efficiency for Small Cars with R744. *Proceedings of the VDA Alternate Refrigerant Winter Meeting 2007,* Saalfelden, Austria.

[26] Wiedenmann E, Schönenberger J, Hafner A, Banasiak K, Girotto S, 2014 Effiziente Kälteerzeugung im Supermarkt CO_2 Kälteanlage mit Ejektor *Proceedings of the annual DKV meeting*, Düsseldorf, Germany.