Electrostatic vibration energy harvester using an electret-charged mems transducer with an unstable auto-synchronous conditioning circuit

Armine Karami[1], Philippe Basset[2], Dimitri Galayko[1]

[1]Sorbonne Universités, UPMC Univ Paris 06, CNRS, LIP6, Paris, France
[2]ESIEE-Paris, Université Paris-Est Marne-la-Vallée, Noisy-le-Grand, France

E-mail: armine.karami@lip6.fr

Abstract. This paper reports for the first time experiments using an electrostatic vibration energy harvester comprised of a low voltage electret-charged MEMS transducer joined to an unstable auto-synchronous conditioning circuit with rectangular charge-voltage characteristic, also known as the Bennet's doubler conditioning circuit. The experimental results show that the electret voltage, even if of low value, can be used as the necessary pre-charge for these type of electrostatic vibration energy harvesters. Also, the use of such a conditioning circuit with a low-voltage electret capacitive MEMS tranducer instead of the previously-reported conditioning circuits with direct connection to load or through a rectifier, can be advantageous in terms of maximal harvested power for a low-voltage electret, showing up to 95% higher converted power.

1. Introduction

In the recent years, extensive research has been done on electret-based electrostatic vibration energy harvesters (e-VEHs). High-voltages electret have enabled the realization of e-VEHs with relatively high harvested power density from relatively high-gap and/or in-plane moving electrode capacitive transducers [1]. These electret e-VEHs have been experimentally tested using either a direct connection to an impedance-matched load – also known as the primitive conditioning circuit –, or simple conditioning circuits consisting of a diode bridge connected to an impedance-matched load, with or without the use of a smoothing capacitor.

However, electrets may be subject to degradation resulting in the decrease of their built-in voltage over time. This problem is strongly linked to the materials and the technology used to implement the charged electret layer. As the electret voltage decreases, so does the converted power if using the previously-mentioned conditioning circuits.

Notwithstanding this decrease of the electret built-in voltage, recently, a new class of conditioning circuits was discovered: inspired from the "Bennet's doubler of electricity", they allow an exponential self-increase of their biasing, and thus of the converted power, at the small cost of a low pre-charge voltage. In the electrical domain, these circuits show no saturation of the harvested power over time of operation. Moreover, these circuits are inductorless and do not require any external command for synchronization [2, 3].

This paper presents the first experiment combining the Bennet's doubler conditioning circuit, which will be called the unstable auto-synchronous conditioning circuit in the rest of the paper,

Content from this work may be used under the terms of the Creative Commons Attribution 3.0 licence. Any further distribution of this work must maintain attribution to the author(s) and the title of the work, journal citation and DOI.
Published under licence by IOP Publishing Ltd

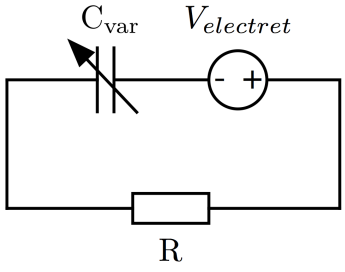

Figure 1. The primitive conditioning circuit

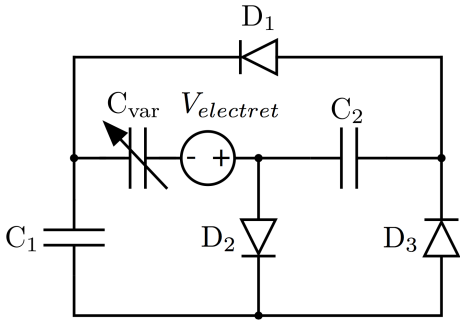

Figure 2. The used unstable auto-synchronous conditioning circuit. The electret charged transducer is modeled by C_{var} and $V_{electret}$

to an electrostatic transducer with a weakly charged electret layer. The goal of the experiment is to prove that an electret, even of low voltage value, can be used as the necessary pre-charge for e-VEHs using unstable auto-synchronous conditioning circuits. In order to appreciate the advantage of this configuration, an experiment where the same electret capacitive transducer is associated to a primitive conditioning circuit is also carried out. The maximum harvested powers with each one of the conditioning circuits are then compared. This comparison can be extended to variations of the primitive conditioning circuit that have been extensively used with electret e-VEHs [1].

2. Presentation of the e-VEH and previous experiments

2.1. Presentation of the electret MEMS capacitive tranducer

The MEMS device used in the experiment reported in this paper has a very similar geometry to the device presented in [4]. The device was charged with an electret layer using the corona charging technique. In the electrical circuit domain, the electret is electrically modeled by the voltage source $V_{electret}$ in series with the transducer, as depicted in Fig. 1 (joined to the primitive conditioning circuit) and Fig. 2 (joined to the unstable conditioning circuit). After charging, this voltage was measured at 22 V. However, because of the electret layer degradation over time, several weeks after the charging, the voltage $V_{electret}$ was measured at 5.3 V. All the experiments presented in this paper were carried out with this lower electret voltage.

2.2. Presentation of the unstable auto-synchronous conditioning circuit

The unstable auto-synchronous conditioning circuit derived from the Bennet's doubler electrostatic engine, is depicted in Fig. 2. The circuit operates as a charge pump, which shows an exponential increase of the voltages across the circuit's capacitors, if studied in the electrical domain. Indeed, the periodic variation of biased C_{var} induces the conversion of an amount of energy that is proportional to the square of C_{var} bias, and that can be computed from the rectangular-shaped QV conversion cycle of the circuit. A part of this energy is reinvested on C_{var} to increase its bias, hence implementing an avalanche mechanism of increase of bias across the transducer and the fixed capacitors of the circuit, and thus of converted power. The remaining part of the converted energy is splitted between the circuit's fixed capacitors. The total converted power also depends on the transducer extreme capacitance values ratio C_{max}/C_{min}. More details on the circuit's operation are given in [5] for an electret-free transducer. The global operation of the circuit is not modified by the use of an electret charged transducer. In the present paper, the capacitor values were chosen as $C_1 = 100$ nF and $C_2 = 2$ nF.

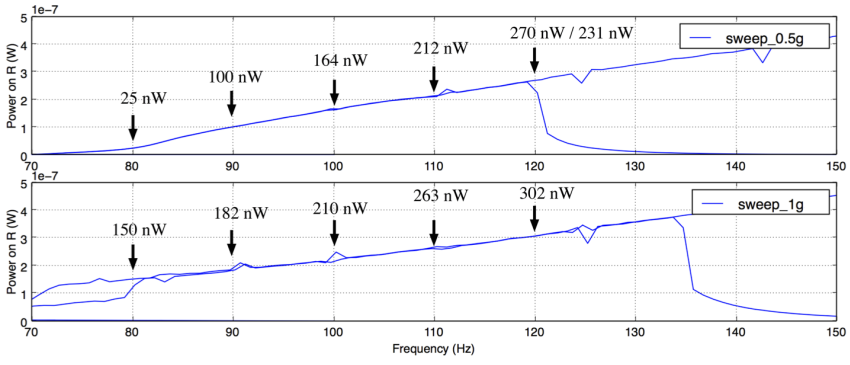

Figure 3. Results of experiment 1: results for the e-VEH with the primitive circuit excited under frequency-swept external accelerations of 0.5g rms and 1g rms. The measured quantity is the power dissipated on the resistance, plotted over the frequency of the input acceleration

3. Experimental results and discussion

3.1. Presentation of the experiments

3.1.1. Experiment 1 The electret MEMS transducer device was first tested in experiment 1 using the primitive conditioning circuit, depicted in Fig. 1. For this experiment, the transducer was submitted to a slow swept frequency sinusoidal input acceleration, between 70 Hz and 150 Hz, at two different rms values: 0.5 g and 1 g. For each amplitude of excitation, the optimal resistance for the primitive conditioning circuit was used, after an experimental measurement of its value.

Throughout the sweep, for each frequency of the input, the power dissipated on the load resistance R was measured. This measurement also gives an idea of the resonator's mechanical frequency response under the different accelerations, affected by mechanical nonlinearities as described in [7]. Note that the slow sweeping speed allows to consider that the dissipated power values on R were obtained in the steady-state mode of operation of the circuit for each frequency of the input. The results of experiment 1 are depicted in Fig. 3.

3.1.2. Experiment 2 Then, the transducer was tested in experiment 2 using the unstable auto-synchronous conditioning circuit, depicted in Fig. 2. To compare the maximal harvested power with the experiment 1, the frequencies of the input were chosen in the frequency band obtained in experiment 1. In experiment 2, the transducer was submitted to input accelerations at those fixed frequencies, of the same amplitudes as those used in experiment 1.

At each cycle of the circuit operation, the converted power is splitted between the circuit's capacitors and the transducer proportionally to their capacitance value. Because the capacitances values were chosen as $C_1 >> C_2 >> C_{max}$, the harvested power defined as the variation of the energy on C_1 throughout one cycle of operation is a good approximation of the total converted power. The evolution of the harvested power over time is measured in experiment 2, through the measurement of the voltage and energy over time across C_1.

Before the start-up ($t = 0$ in the plots), all nodes were short-circuited to the ground, thus nulling the initial voltages across the fixed capacitors and annhilating any possible external pre-charge. The results of experiment 2 are depicted in Fig. 4 and Fig. 5.

3.2. Results and discussion

First, note that in Fig. 4 and 5, no exponential increase of the voltage across the circuit's capacitors is observed. In fact, it does occur at the very beginning of each experiment, but the low maximum over minimum capacitance ratio of the used transducer compared to the transducer used in [6] immediately results in the observed saturation phenomenon, which is of

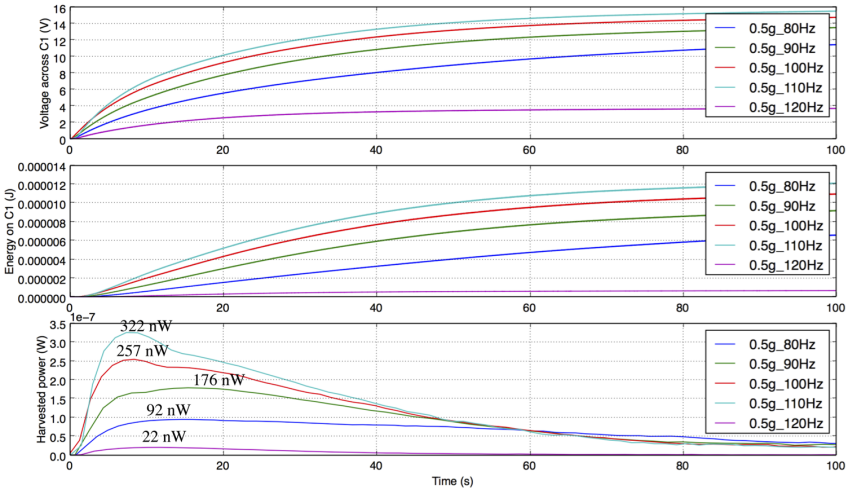

Figure 4. Results of experiment 2: e-VEH with the unstable auto-synchronous circuit, excited under different fixed frequencies external accelerations, of 0.5g rms amplitude. Measured voltage and energy across the largest fixed capacitor, and harvested power, all plotted over time

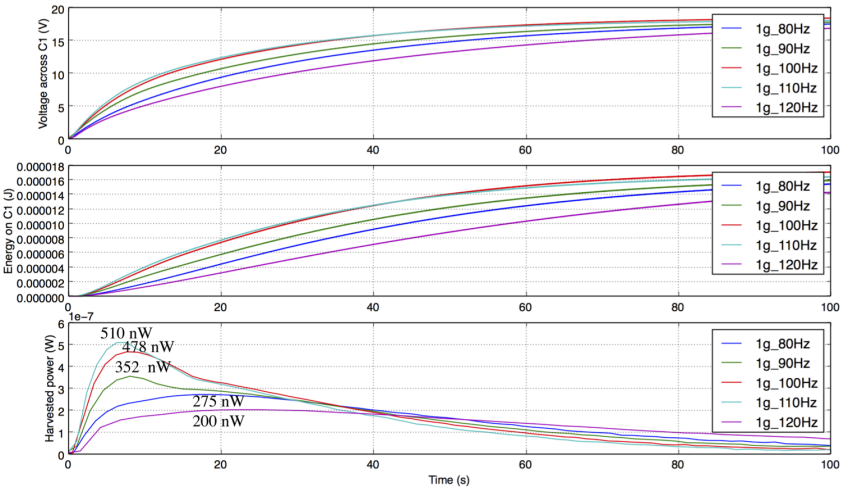

Figure 5. Results of experiment 2: e-VEH with the unstable auto-synchronous circuit, excited under different fixed frequencies external accelerations, of 1g rms amplitude. Measured voltage and energy across the largest fixed capacitor, and harvested power, all plotted over time

the same origin as in [6], namely the electromechanical coupling-induced resonator bandwidth shift. Also, the results show that the highest harvested power figures were obtained when the transducer was submitted to input accelerations of frequencies slightly lower than the frequency of the peak of amplitude in the resonator's response, for the same qualitative reasons discussed in [6].

For both of the tested amplitudes, there exists a frequency of input acceleration for which the maximal power point reached with the unstable auto-synchronous conditioning circuit is higher than the power dissipated on the primitive circuit's resistance. At 110 Hz of 1g amplitude input, the results with the unstable auto-synchronous conditioning circuit yield a maximal converted power up to 95% superior to the converted power with the primitive conditioning circuit for the same input. Thus, under specific input conditions and with the tested device, the use of

the unstable auto-synchronous conditioning circuit is advantageous over the use of the primitive conditioning circuit.

Qualitative arguments about the operation of the system with each of these circuit can be used to explain the differences between the converted power, given the low value of the electret voltage for the device used in the experiments. Indeed, the converted power for the primitive conditioning circuit roughly increases with the square of the electret voltage, whereas the unstable auto-synchronous conditioning circuit uses its voltage as a pre-charge to reach a maximal power point at a higher voltage. Furthermore, the advantage of the unstable conditioning circuit configuration over the primitive circuit is transitive to diode-bridge rectifier-based conditioning circuits such as the circuit used in [8]. Indeed, the maximal converted power for these circuits is also proportional to the square of the electret voltage.

Still, the lack of a quantitative theoretical model that fully describes the dynamics of the electromechanically-coupled system makes it hard to determine, in general, which one of the conditioning circuits will have better performances, in terms of maximal harvested power. Indeed, the circuit's conditioning schemes are different and result in different impact of the electromechanical coupling, leading to different system dynamics, and thus harvested power. Hence, under given design constraints, there is currently no other mean than numerical simulation and/or experimental testing to formally chose a conditioning circuit over the other.

4. Conclusion

This work experimentally validated that an electret can be used as the necessary pre-charge source for an e-VEH using the unstable auto-synchronous conditioning circuit, also called the Bennet's doubler. Secondly, the experiments also show that in the presence of a lowly-charged electret, the use of this unstable auto-synchronous conditioning circuit can be advantageous over the use of simpler primitive or rectifier-based conditioning circuits. The maximal converted power was up to 95% higher with the unstable auto-synchronous conditioning circuit compared to the primitive conditioning circuit. The use of the unstable auto-synchronous conditioning circuit is thus a potential solution to the problem of the slow discharge of the electret layer.

References

[1] Suzuki Y, Miki D, Edamoto M, Honzumi M 2010 "A MEMS electret generator with electrostatic levitation for vibration-driven energy-harvesting application" *J. Micromech. Microeng.* **20** 104002

[2] Queiroz A C M and Domingues M 2011 "The doubler of electricity used as battery charger" *IEEE Trans. Circuits Syst. II, Exp. Briefs* **58** 797-801

[3] Lefeuvre E, Risquez S, Wei J, Woytasik M and Parrain F 2014 "Self-biased inductor-less interface circuit for electret-free electrostatic energy harvesters" *Journal of Physics: Conference Series* **557** 012052

[4] Basset P, Galayko D, Paracha A, Marty F, Dudka A and Bourouina T 2009 "A batch-fabricated and electret-free silicon electrostatic vibration energy harvester" *J. Micromech. Microeng.* **19** 115025

[5] Dorzhiev V, Karami A, Basset P, Dragunov V and Galayko D 2014 "MEMS electrostatic vibration energy harvester without switches and inductive elements" *Journal of Physics: Conference Series* **557** 12126-30

[6] Dorzhiev V, Karami A, Basset P, Marty F, Dragunov V and Galayko D 2015 "Electret-free micromachined silicon electrostatic vibration energy harvester with the bennets doubler as conditioning circuit" *IEEE Electron Device Lett.* **36** 183-5

[7] Basset P, Galayko D, Cottone F, Guillemet R, Blokhina E, Marty F and Bourouina T 2014 "Electrostatic vibration energy harvester with combined effect of electrical nonlinearities and mechanical impact" *J. Micromech. Microeng.* **24** 035001

[8] Miki D, Suzuki Y, Kasagi N 2009 "Effect of nonlinear external circuit on electrostatic damping force of micro electret generator" *Solid-State Sensors, Actuators and Microsystems Conference (TRANSDUCERS) International Conference on* 636-9