Journal of Physics: Conference Series **582** (2015) 012035 doi:10.1088/1742-6596/582/1/012035

Manipulator Controlled since a Smartphone by Bluetooth

F Sánchez-Niño, G Rodríguez Pedroza, E G Castillo Baldivia
IICO-UASLP, Av. Karakorum 1470 Lomas 4a sección
San Luis Potosí, S.L.P, 78210, México

E-mail: franciscosanchezn@gmail.com

Abstract. We present the design of transmitter interface of data between a microcontroller and Smartphone to control a robot. We used a Bluetooth module to send the commands to control the moving of the manipulator. The system is formed by three parts: the first part, the program made in Android. It is run on the Smartphone that controls the position of the robot. The second part is the reception board based in the PIC18F4550 that energizes the joints of the manipulator. The last part is the driver. It use an integrated circuit L293D that is configured in two full bridges H. This system is a good tool for learning of programing, sensors, actuators, robotic, electronic and design electronic.

1. Introduction

Bluetooth is a radiofrequency technology that permits the wireless connection between devices in remote form giving an excellent security in the data transmission. The main characteristics are: sturdiness, low consumption of energy, low cost, transmission of voice and data, also can be used in fixed and mobile devices. Bluetooth is a standard IEEE 802.15.1 that works in the band since 2.4 to 2.485 GHz using the full duplex transmitter data in a rated speed of 9600 baud. Nowadays the Bluetooth technology is used in the following areas: informatics, telecommunications, automation, entertainment, laptops, system electronics and mobile technology [1, 2, 3].

2. Implemented system

In the figure 1 we show the block diagram of the implemented system It is formed basically by the Android program, the reception board based in microcontroller PIC18F4550 [4, 5, 6], the driver board and manipulation. In the next paragraphs are described each element.

Content from this work may be used under the terms of the Creative Commons Attribution 3.0 licence. Any further distribution of this work must maintain attribution to the author(s) and the title of the work, journal citation and DOI.
Published under licence by IOP Publishing Ltd

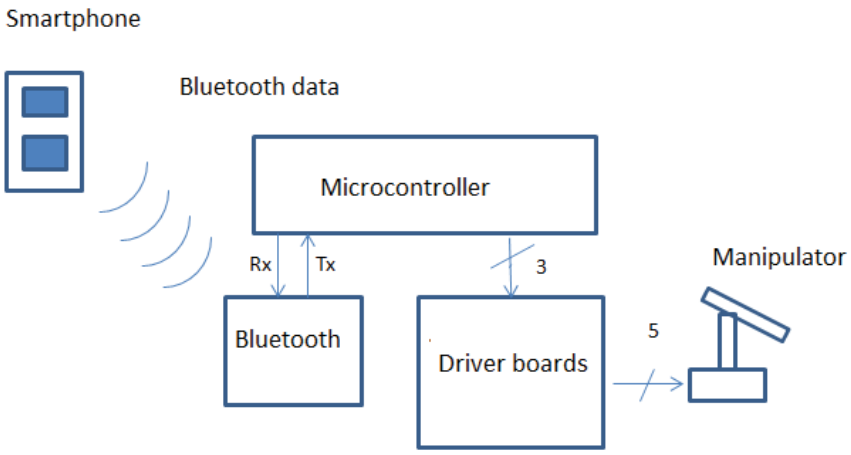

Figure 1. Block diagram of the system.

2.1 Android program

For this application, we use the libraries and tools provided by App Inventor Classic [8]. With this IDE was developed the program that runs on the Smartphone with Android system 2.3.5. In the figure 2 we show the principal screen of the application.



Figure 2. Control panel of the Bluetooth application.

The interface consists in a serie of buttons used to send commands to microcontroller PIC18F4550. In this form the microcontroller sends a signal to manipulator, also the application show the state or action made by the manipulator through visual indicators.

2.2 Receptor system by Bluetooth based in microcontroller PIC18F4550

The receptor system is based on the microcontroller PIC18F4550 and the main characteristics are: 5 Ports I/O, 4 timers, 20 interrupt sources, UART, USB, 13 A/D, 2 PWM and 2 EPWM [4, 5, 6]. The microcontroller is communicated through UART with Bluetooth module HC-06. It receives the commands to run by manipulator, this command is sent to PIC18F4550 by means of RX and TX Pins. The main features of the Bluetooth module are the following: voltage source since 3.6 V to 5.5 V, transmission rate since 1200 to 115200 baud, it works only like slave, current of 20 mA to 30 mA without connection and 8 mA with connection. The microcontroller receives the command and it uses a structure switch decides the action to run. The table 1 shows the commands.

Command	Function
0A	Open clamp
0B	Close clamp
0C	Up link 1
0D	Down link 1
0E	Up link 2
0F	Down link 2
0G	Up link 3
0H	Down link 3
0I	Turn left
0J	Turn right

Table1. Commands used by the microcontroller to define the action to be performed by the manipulator.

2.3 Driver board

Upon receipt of the data, the motors of the robot are energized through the driver board. In the figure 3 we show the block diagram of the driver board used to energize at the motors of the robot. This board is based in the integrated circuit L293D, it contains internally 2 full bridges H or 4 half bridges H. Three drivers boards were manufactured for apply current to the five motors of robot [7].

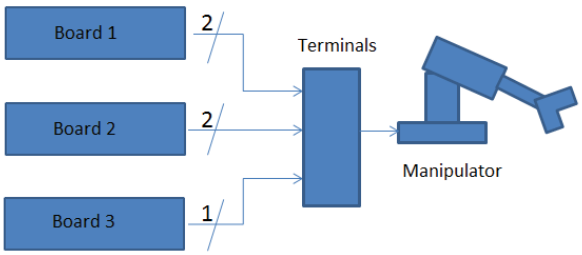

Figure 3. Block diagram of the driver board.

2.4 Manipulator

The manipulator has five degrees of freedom, three degrees for locate the object and two degrees to clamp the element. The table 2 shows the joints and their main characteristics.

Joint	Feature	Joint	Feature
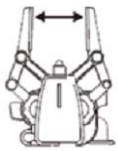	Maximum aperture of 4.5 cm.	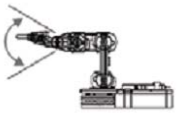	Vertical movement of the clamp 120 °.
Joint	**Feature**	**Joint**	**Feature**
	Vertical movement of the upper arm of 300 °.	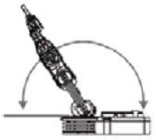	Vertical movement of the lower arm 180°.
Joint	**Feature**	The clamp has a capacity of 0.1 Kg. This arm has 5 DC motors and an LED to illuminate the work area of the clamp.	
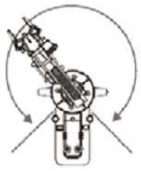	Horizontal movements of the arm mount 270°.		

Table 2. The joint features of the robot.

3. Results

We carried out several performance tests to the system developed to check reach and response. The right ranges of data are about 10 m. To lengths above 10 m the data are not reliable. Also we carried out test with obstacle and walls that interfered with the signal; we observed that the distance and the intensity signal did not change. The system response is optimal due to that the response of the motors is immediately and the movements of the manipulator are almost instantaneous.

4. Conclusions

We designed a robotics system based in microcontrollers PICs and frontal panel developed in Android to control the manipulator. This system is a good tool for learning of programing, sensors, actuators, robotic, electronic and design electronic. This system will use in courses of college and postgraduate to reinforce the knowledge of the students.

References

[1] McComb G. and Predko M 2006 *Robot Builder's Bonanza Third edition* (New York, Mc Graw Hill)
[2] Angulo J M and Romero S 2005 *Introducción a la robótica* (Thomson)
[3] Groover M P 2007 *Fundamentos de manufactura moderna: materiales, procesos y sistemas* (Mc Graw Hill)
[4] Lázaro A M 2001 *LabVIEW 6i Programación Gráfica para el Control de Instrumentación* (Paraninfo)
[5] Brey B B 2007 *Applying PIC18 Microcontrollers Architecture, Programming, and Interfacing Using C and Assembly* (Prentice Hall)
[6] Deitel P J and Deitel H M 2004 *C/C++ y Java Cómo Programar* (México, Prentice Hall)
[7] Horowitz P and Hill W 1989 *The Art of Electronics* (Cambridge University Press)
[8] http://appinventor.mit.edu/explore/ai2/tutorials.html