Comparative analysis of heat dissipation panels for a hybrid cooling system integrated in buildings

A Zuazua-Ros[1], JC Ramos[2], C Martín-Gómez[1], Tomás Gómez-Acebo[2] and A Pisano[2]

[1]Construction, Building Services and Structures Department, Universidad de Navarra, 31180, Pamplona, Spain
[2]TECNUN School of Engineering, Universidad de Navarra, 20018, San Sebastián, Spain

Abstract. The use of cooling panels as heat dissipation elements integrated in buildings has been previously investigated by the authors. Those elements would be connected to the condenser and would dissipate the heat in a passive form. Following the research, this study analyses and compares the thermal performance of two heat dissipation panels as part of a hybrid cooling system. Both panels were experimentally tested under different variables, thus having nine scenarios for each panel. Additionally, an already validated model was applied. The empirical results show a considerable difference between the cooling capacity among them, doubling the daily average ratio in one scenario. The heat dissipation ratios vary between 106 and 227 W/m^2 in the first case and 140 and 413 W/m^2 in the second. Regarding the model applicability, the average error for each panel was 4.0% and 8.5%. The bond between the metal sheet and the pipes of the panels has proven to be the main parameter to assure the highest heat dissipation potential of each panel.

1. Introduction

Energy demand for cooling is expected to increase in the residential, industrial and service sectors in the next 50 years [1]. Besides, cooling represents a significant use of energy globally and a meaningful driver of peak electricity demand. A recent study about the future of cooling in buildings concludes underlining the importance of the development of alternative cooling dissipation technologies based on the use of low temperature environmental sinks [2].

In this context, passive cooling systems are those techniques that use natural driving forces to circulate fluid, while active systems require external mechanical power to operate. Thus, hybrid systems are the combination of both, the use of natural driving forces and the need of mechanical power [3]. The components analysed in this study are part of a hybrid cooling system solution.

The origin of the solution derives from the attempt to propose an alternative to evaporative cooling systems, specifically those that include cooling towers [4]. Cooling towers are heat dissipation equipment that push the waste heat generated in cooling systems into the atmosphere. All cooling towers, to greater or lesser degree, have the following drawbacks: (a) High water use (it increases considerably in open circuit systems). In addition, several chemical products must be used for fluid treatment. (b) Legionella. It is widely known that cooling towers represent a source of Legionnaires' disease outbreaks [5]. (c) Maintenance requirements. Tower manufacturers specify the operation and maintenance manuals. Additionally, ASHRAE recommends an inspection and maintenance schedule [6]. Since the maintenance must be strict in a tower or evaporative condenser, it involves high costs in terms of personnel and products. (d) Noise and vibrations. These are mostly generated by fans. (e)

Content from this work may be used under the terms of the Creative Commons Attribution 3.0 licence. Any further distribution of this work must maintain attribution to the author(s) and the title of the work, journal citation and DOI.
Published under licence by IOP Publishing Ltd

Operating cost. The items that make the greatest contribution to operating costs are water, electricity (pumps and fans), chemicals (to maintain water quality) and operators. All these components made necessary to develop an alternative system that would eliminate or reduce the environmental and economic impact of cooling towers.

In this context, an alternative application of a heat dissipation solution was proposed. The solution deals with the design of heat dissipation surfaces integrated in building façades. Those surfaces would dissipate the heat generated in cooling cycles and seek to reduce the energy consumption for cooling in buildings. In this way, the drawbacks of evaporative cooling systems would be reduced or eliminated. The diagram of the system is shown in Figure 1.

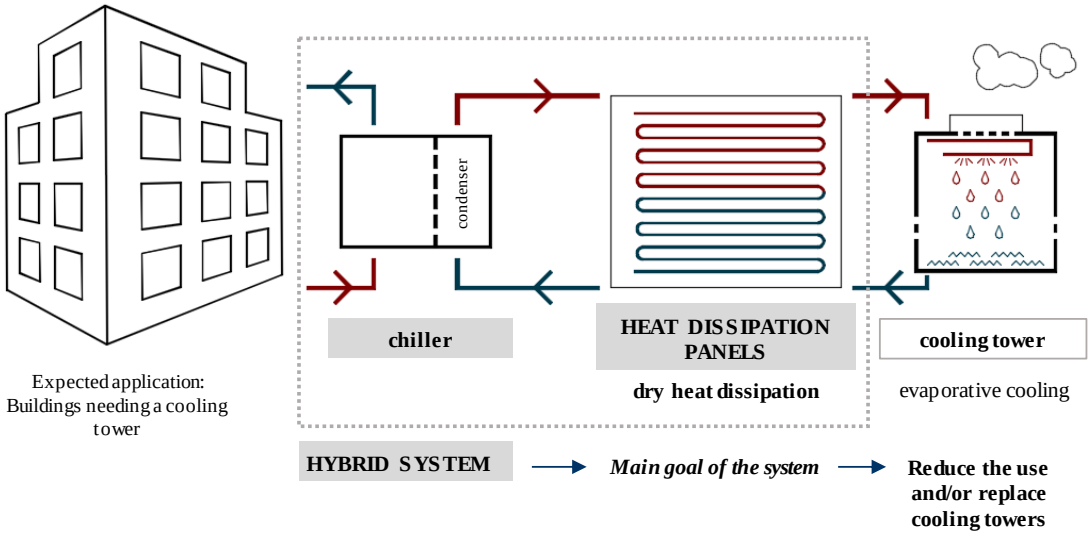

Figure 1. Schematic diagram of the solution.

The heat sink used is the ambient temperature and the heat transfer method is by radiation and convection. The system resembles to night-time radiation systems, where the sky temperature is the heat sink. However, the operation temperatures are higher in this study, allowing the system to operate 24 hours. There are other studies based on radiative surfaces as heat dissipation method. For example, in the study by Erell [7] has been calculated radiative cooling using unglazed flat-plate solar collectors, connected to a storage tank and operating during night. Other recent studies have used flat plate collectors on rooftops, saving the 10% of the power consumption for cooling purpose during overnight exposure in different cities of Malaysia [8]. In the study of Cui et al., the cooling capacity of a radiative panel has been analysed depending on the tilted angle, where the cooling potential decreases considerably in vertical position [9]. There are studies that consider the integration of the cooling system in the construction, as [10], where the experimental results showed an average cooling capacity that reaches 87 W/m^2 in Tianjin, China. The panel in the present study has been supposed to work in the external layer of the façade of a building, in order to be exposed to the highest natural ventilation possible. A similar envelope design was made by [11] in Japan, which is installed in an already existing building.

In this case the proposal has three main characteristics that must be addressed: (1) the heat sink used is the ambient air temperature and surroundings, (2) the heat transfer method is by radiation and convection and (3) the final aim of the solution is to integrate the panels in a vertical position in a building envelope. The preliminary results has shown a potential energy savings between 11 and 33 % depending on the operation conditions of the cooling panels [12].

In this document, a comparison between two options for the cooling panel is made in order to analyse on the one hand, the heat dissipation capacity difference and on the other, the applicability of the mathematical model previously validated with the first panel. Besides, a brief evaluation of the parameters that affect the performance is made and an optimized panel option is studied.

2. Experimental setup and model description

Two heat dissipation panels will be analysed. The first one, hereinafter referred as cooling panel, was assess to validate the mathematical model presented in [13]. Initially, it was commercialised for chilled indoor ceilings (model WK-D-UM by TROX) but it was tested outdoors in a vertical position, see Figure 2. The second panel, hereinafter solar collector, consist on a solar thermal collector obtained from the company Junkers (model FKC-2), in which the glass cover has been removed, Figure 3.

Figure 2. Cooling panel TROX.

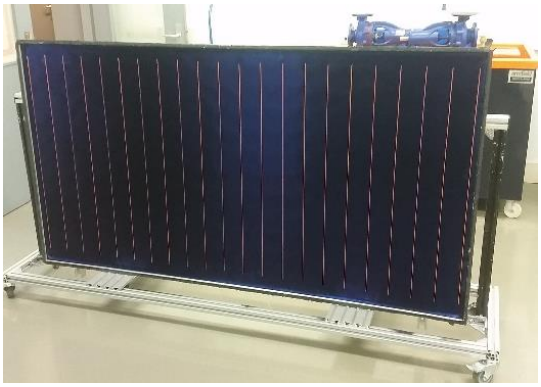

Figure 3. Solar collector by Junkers.

In both cases the experimental rig is completed with a closed hydraulic circuit that includes a chiller, a thermostatic bath, a flow meter with a precision of 1.26% of full scale, a needle valve and the connection lines, as shown in Figure 4. Regarding the temperature control and measurement, twenty-two T-type thermocouples with a precision of ±0.5°C were installed to measure the temperature in different part of the panel. Moreover, other thermocouples were installed to measure the temperatures of the ambient air (T_{amb}) and the inlet (T_{in}) and the outlet (T_{out}) temperatures. Regarding the heater, the temperature (T_h) was calculated directly by bath's sensor. The prototype was set up in San Sebastian (in the north of Spain) and the experiments were carried out during June and July 2016 for the cooling panel and May and June 2017 for the solar collector.

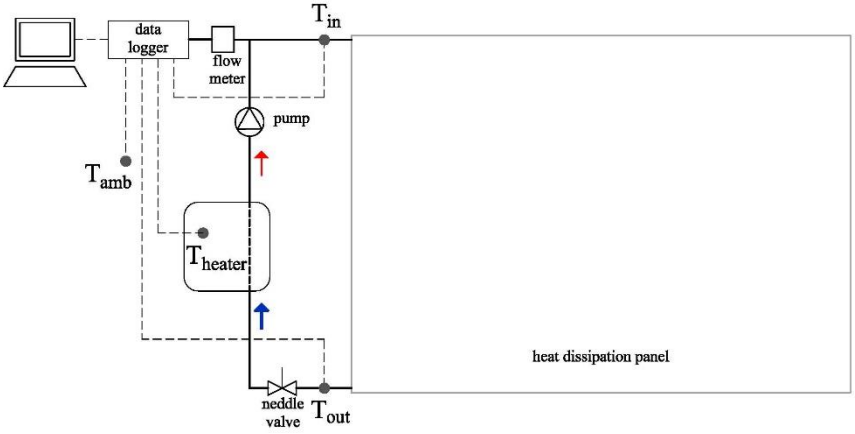

Figure 4. Experimental setup schematic.

The thermal conductivity of the union between the pipes and the metal sheet, expressed as C_s, is one of the key parameters for obtaining a high dissipation ratio. It is calculated from the steady state values taken from experiments carried out indoors, with a constant ambient temperature. The value obtained in each panel differs considerably, since it is 1.5 W/m K for the cooling panel, where the union between the coil and the support plate is press-clipped, and 25 W/m K for the solar collector, where the coil is welded. In Table 1 the main physical characteristics of each panel are shown.

The panels were placed in a vertical position (tilt angle 90°), north oriented, avoiding as much as possible the solar beam radiation. Nine different scenarios were analysed, with three inlet temperatures

(35, 40 and 45ºC) and three fluid flowrates (0.5, 1 and 1.5 l/min). Each test was named to reflect the scenario; the names consist of the inlet temperature followed by the fluid flow rate. For example, test T35q05 has an inlet temperature of 35°C and a volumetric flowrate 0.5 l/min.

Table 1. Main characteristics of the cooling panel and the solar collector.

Parameter	Symbols	Unit	Cooling panel	Solar collector
Support plate				
Area	A	m^2	2.40	2.18
Plate thickness	t	mm	1.5	1
Plate height	L	m	1	1.09
Solar absorptivity	α	-	0.9	0.9
Emissivity	ε	-	0.9	0.99
Pipes				
Distance between tubes	d_t	mm	70	90
External tube diameter	D_{ext}	mm	12.8	8
Internal tube diameters	D_{int}	mm	11.8	7
Number of coils	-	-	14	22

The previously developed model, consists on the calculation of the outlet temperature of the water after dissipating the heat by means of natural convention and radiation to the ambient air and the surroundings. In [13], the whole development of the calculations is presented. However, for this paper, just the main equations that affect the parameters that will be analysed are shown.
The fluid outlet temperature is the unknown parameter that is required to calculate the total heat dissipation of the panel. The calculation is expressed in the energy balance equation (1). This equation calculates the net cooling potential of the panel.

$$\dot{Q} = \dot{m} \cdot \bar{c}_p \cdot \left(T_{in} - T_{out}\right) \tag{1}$$

In order to calculate the fluid outlet temperature, equation (2) is used, from Duffie and Beckman [14]. This equation calculates the fluid outlet temperature as a function of the rest of the parameters of the cooling panel.

$$\frac{T_{out} - T_{amb} - \dot{S}/U_L}{T_{in} - T_{amb} - \dot{S}/U_L} = \exp\left(-\frac{A_p \cdot U_L \cdot F'}{\dot{m} \cdot c_p}\right) \tag{2}$$

The panel efficiency factor, F', represents the relation between the real energy loss of the panel and the energy loss that would be obtained if the panel achieved the same temperature as the fluid. F' is given by equation (3).

$$F' = \left(1/U_L\right)\left\{d\left[\frac{1}{U_L\left[\left(d_t - D_{ext}\right)\eta_f + D_{ext}\right]} + \frac{1}{h_{\text{int}}\pi D_{\text{int}}} + \frac{1}{C_s}\right]\right\}^{-1} \tag{3}$$

where d is the distance between the tubes, D_{ext} is the external diameter of the tube and η_f is the fin efficiency factor. In this case the fin is represented by the perforated plate, and its efficiency is given by equations (4) and (5).

$$\eta_f = \frac{\tanh\left[m\left(d - D_{ext}\right)/2\right]}{m\left(d - D_{ext}\right)/2} \tag{4}$$

$$m = \sqrt{U_L / k_p t} \tag{5}$$

To evaluate the performance of the cooling panel, efficiency was defined as the ratio of the real heat transfer to the maximum heat transfer if the outlet temperature was equal to the ambient temperature, equation (6).

$$\eta = \frac{T_{in} - T_{out}}{T_{in} - T_{amb}} \tag{6}$$

The mean temperature of the panel, which is needed to calculate the overall thermal losses coefficient, U_L, is taken as the mean temperature of the inlet and the ambient temperatures, which is the correlation found from the initial experiments. Besides, due to the low incidence of the solar radiation shown in the experiments, the S is composed only by the direct radiation, and the reflected and diffuse components of the solar radiation are disregarded. The values of the solar radiation are taken from month average values based on the Spanish regulation CTE [15].

3. Experimental results and simulation

The analysis of the results is divided in three parts, first the experimental data comparison, then the applicability of the mathematical model in both heat dissipation panels and finally the analysis of an improved proposal.

3.1. Experimental results

From each scenario, at least 24 hours of test data are obtained, recording the values every minute. As it is predicted, the ambient temperature affects directly the outlet temperature, when the ambient temperature increases, the outlet temperature increases as well, reducing the heat dissipation capacity.

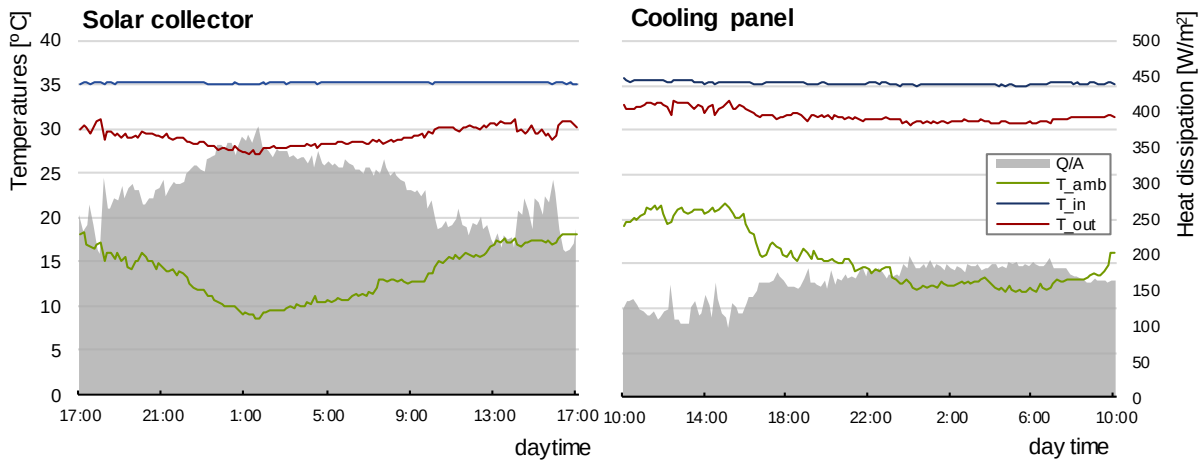

Figure 5. Experimental results comparison of the scenario T35q15.

The graphs from Figure 5 show the typical days data, when the outlet temperature decreases the dissipated heat increases. The solar collector dissipates more heat (corresponds to the grey shading, in W/m^2) than the cooling panel under the same variable conditions of inlet temperature and fluid flow. The ambient temperature averages for each 24-hour test are 13.5 °C for the solar collector and 15.6 °C for the cooling panel, which partially could explain the difference in the heat dissipation, however, when both ambient temperatures are around 15 °C, the heat dissipation is always clearly higher with the solar collector.

Regarding the dissipated heat ratio, Table 1 gathers the data about the average dissipation and the standard deviation of each scenario, along with the efficiency and the ambient temperature average of each panel. Comparing the heat dissipation ratio, the solar collector always dissipates more, even when the ambient average temperature is higher. In addition, the dissipated heat is always higher when the fluid flow increases in every case. The difference between the panels reaches a maximum of 106 %

in the scenario T35q15, which is the case of Figure 4. In average, considering the nine scenarios, the difference on the heat dissipation is 75 %. The performance values also are always higher in the results obtained with the solar collector. For both panels, when the fluid flow rate increases, the performance decreases.

The heat dissipation difference between the panels is mainly due to the efficiency factor value, F' (equation 3). The efficiency factor mean value for the cooling panel is 0.56, however, the solar collector has an efficiency factor of 0.91. This difference is caused by the thermal conductivity of the union between the pipes and the metal sheet, C_s, which differs considerably among both panels, as explained in section 2.

Table 2. Summary of the outdoor results.

Scenarios		Cooling panel			Solar collector			Mean heat dissipation difference
T_{in} [℃]	q [l/min]	T_{amb} [℃]	Heat dissipation [W/m^2]	η	T_{amb} [℃]	Heat dissipation [W/m^2]	η	
35	0.5	17.9	106 ±22	47%	19.1	140 ±25	71%	32%
	1	20.8	109 ±16	25%	21.1	174 ±26	36%	59%
	1.5	18.7	141 ±24	19%	13.6	291 ±45	28%	106%
40	0.5	19.7	139 ±21	49%	16.3	224 ±27	58%	61%
	1	19.1	159 ±20	27%	17.9	293 ±19	41%	85%
	1.5	20.1	171 ±17	19%	19.0	336 ±71	31%	97%
45	0.5	18.1	174 ±15	46%	21.1	247 ±35	65%	42%
	1	19.6	195 ±21	27%	20.6	326 ±86	41%	67%
	1.5	17.7	227 ±35	19%	17.1	413 ±28	32%	82%

3.2. Model applicability

The model developed for the cooling panel is applied also for the solar collector to calculate the outlet temperature in each scenario. The graphs in Figure 5 are an example of the results achieved with the model fitting.

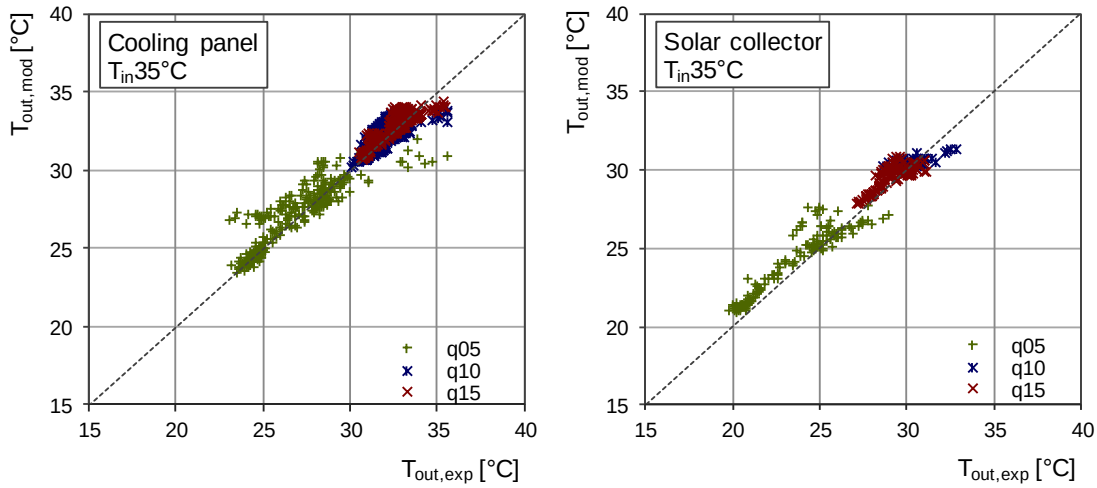

Figure 6. Correlation between the experimental and the calculated outlet temperature with an inlet temperature of 35 °C.

These graphs are used with the aim of enabling an initial reading of the error magnitude. Both variables are related and the deviation to the ideal scenario can be checked. The outlet temperature results in the cooling panel are higher than the outcomes in the collector. The graphs also show that the model generally gives a higher temperature than the reality.

Table 3. Daily total dissipated heat comparison between the experimental and model results.

scenarios		Cooling panel			Solar collector		
T_{in}	q	Total dissipated heat [kWh/m^2·day]		Difference	Total dissipated heat [kWh/m^2·day]		Difference
[℃]	[l/min]	experimental	model	[%]	experimental	model	[%]
35	**0.5**	2.55	2.46	-3.5	3.35	3.16	-5.8
	1.0	2.62	2.59	-1.3	4.18	4.22	1.0
	1.5	3.39	3.17	-6.4	7.04	6.61	-8.0
40	**0.5**	3.33	3.08	-7.3	5.37	5.17	-3.7
	1.0	3.81	3.70	-2.8	7.03	6.17	-12.3
	1.5	4.10	3.89	-5.0	8.07	6.67	-17.4
45	**0.5**	4.11	3.99	-2.8	5.93	5.55	-6.4
	1.0	4.67	4.52	-3.2	7.83	7.03	-10.2
	1.5	5.46	5.29	-3.1	9.92	8.55	-13.8

For Table 3, the periods where the system is not dissipating because of direct solar radiation are not considered. The average absolute difference in the case of the cooling panel is 4.0 %, however, for the solar collector, the difference increases to 8.5 %. Thus, the model developed and validated in [13], is more adjusted to the cooling panel than the collector. In the case of the solar collector, there are three scenarios where the error value exceeds 12 %. It may be addressed that in general the model shows dissipation values lower than the experimental results, except T35q10 in the solar collector.

3.3. F' affection analysis

As explained, the efficiency factor value in the case of the cooling panel is very low due to the poor bond between the metal sheet and pipes. The thermal conductivity of the bond is increased to 25 W/mK and a simulation is run to evaluate how much the heat dissipation would increase. The F' rises from 0.56 to 0.93, which influences in the heat dissipation average increase between 29 and 57 % comparing the experimental outcomes to the new calculated results. Moreover, the efficiencies shown in Table 2 for the cooling panel also increase up to 66 % for 0.5 l/min fluid flow rates, 40 % for 1.0 l/min and 29 % for 1.5l/min. This confirms the importance of the bond design to maximize the cooling potential of configuration type of panels.

4. Conclusions

This paper analyses and compares two heat dissipation panels (named cooling panel and solar collector) which will be components of a hybrid cooling system. The experimental study is made under the variation of two parameters, the inlet temperature and the fluid flow rate, resulting in nine scenarios tested with each panel. The experimental results obtained show that the heat dissipation ratios may vary between 106 and 227 W/m^2 in the case of the cooling panel and 140 and 413 W/m^2 for the solar collector. These results confirm the potential of the use of any of these panels to partially reduce the operation time of a cooling tower. From the empirical analysis, it must be addressed that the thermal conductivity of the bond between the pipes and the metal sheet is a key parameter to assure the highest heat dissipation possible in this serpentine type of panels. Regarding the model applicability, the average error is 4 % in the case of the cooling panel and 8.5 % in the case of the solar collector. Since the solar radiation of the model was calculated with monthly average values, the authors consider that this could be one of the parameters that most affect the error.

5. Acknowledgments

The authors would like to acknowledge the collaboration of Mikel Salazar from TROX SPAIN S.A., Junkers company (which is part of the Thermotechnology Division of Robert Bosch GmbH) and Juan Villaron from Tecnun (University of Navarra).

6. References

[1] European Commission 2016 *An EU Strategy on Heating and Cooling* (Brussels)

[2] M. Santamouris 2016 Cooling the buildings – past, present and future *Energy Build.* **128** 617–38
[3] M. Grosso, G. Fracastoro, M. Simonetti and G. Chiesa. 2015 A hybrid passive cooling wall system: Concept and laboratory testing results *Energy Procedia* **78** 79–84
[4] A. Zuazua-Ros, C. Martín-Gómez, J. C. Ramos and T. Gómez-Acebo. 2016 Bio-inspired heat dissipation system integrated in buildings: development and applications *Energy Procedia - 8th International Conference on Sustainability in Energy and Buildings* (Torino, Italy) pp 51–60
[5] Jamie Bartram, J. V. L. Yves Chartier and K. P. Surman-Lee and S. 2007 *Legionella and the prevention of legionellosis*
[6] ASHRAE 2003 Cooling Towers *ASHRAE Handbook* pp 1–68
[7] E. Erell and Y. Etzion 2000 Radiative cooling of buildings with flat-plate solar collectors *Build. Environ.* **35** 297–305
[8] M. Hanif, T. M. I. Mahlia, A. Zare, T. J. Saksahdan and H. S. C. Metselaar 2014 Potential energy savings by radiative cooling system for a building in tropical climate *Renew. Sustain. Energy Rev.* **32** 642–50
[9] Y. Cui, Y. Wang, Q. Huang and S. Wei 2016 Effect of radiation and convection heat transfer on cooling performance of radiative panel *Renew. Energy* **99** 10–7
[10] C. Yong, W. Yiping and Z. Li 2015 Performance analysis on a building-integrated solar heating and cooling panel *Renew. Energy* **74** 627–32
[11] T. Yamanashi, T. Hatori, Y. Ishihara, N. Kawashima and K. Niwa 2011 BIO SKIN Urban Cooling Facade *Archit. Des.* **81** 100–7
[12] A. Zuazua-Ros, C. Martín Gómez, J. C. Ramos and J. Bermejo-Busto 2017 Towards cooling systems integration in buildings: Experimental analysis of a heat dissipation panel *Renew. Sustain. Energy Rev.* **72** 73–82
[13] A. Zuazua-Ros, J. C. Ramos, C. Martín-Gómez and T. Gómez-Acebo 2017 Experimental assessment and model validation of a vertical cooling panel *Energy Build.* **142** 158–66
[14] J. A. Duffie and W. A. Beckman. 2013 *Solar engineering of thermal processes* (Wiley)
[15] Censolar 2007 *Distribución horaria de la irradiación solar global incidente sobre superficie horizontal en las cinco zonas climáticas definidas en el Código Técnico de la Edificación de España*