Application of Magnetic Nanoparticles in Pretreatment Device for POPs Analysis in Water

Dongzhi Chu[1], Xiangfeng Kong[1,*], Bingwei Wu[1], Pingping Fan[1], Xuan Cao[1] and Ting Zhang[1,2]

[1]Institute of Oceanographic Instrumentation, Shandong Academy of Sciences, No. 37 Miaoling Road, Laoshan District, Qingdao City, Shandong Province, 266061, China
[2]Ocean University of China, No.238, Songling Road, Laoshan District, Qingdao City, Shandong Province, 266100, China

*Corresponding author e-mail: kxf_1985@163.com

Abstract. In order to reduce process time and labour force of POPs pretreatment, and solve the problem that extraction column was easily clogged, the paper proposed a new technology of extraction and enrichment which used magnetic nanoparticles. Automatic pretreatment system had automatic sampling unit, extraction enrichment unit and elution enrichment unit. The paper briefly introduced the preparation technology of magnetic nanoparticles, and detailly introduced the structure and control system of automatic pretreatment system. The result of magnetic nanoparticles mass recovery experiments showed that the system had POPs analysis preprocessing capability, and the recovery rate of magnetic nanoparticles were over 70%. In conclusion, the author proposed three points optimization recommendation.

1. Introduction

Persistent Organic Pollutants (POPs) in the atmosphere, water, and soil environment were widely distributed through various recycling routes, especially water circulation. Studies showed that a variety of POPs were detected in China's "seven water systems", such as γ-HCH, p, p'-DDT and epoxy heptachlor [1]. The content of POPs which has been spread to water was low, but the cumulative transmission effect in the biological chain could not be ignored, and even led to serious damage to local water ecology.

At present, POPs pollution survey used field sampling and laboratory analysis [2, 3]. This kind of detection mode lacked timeliness, and it was easily caused "contamination" and "transformation" of samples. Due to the low content of POPs in water and the large number of interferences in the matrix, the pretreatment steps of the samples were indispensable. Traditional extraction methods [4-10] needed a lot of organic solvents and time-consuming. In addition, detection limit was too high, the operation was too complex. In general, solid phase extraction technology [11, 12] had the highest degree of commercialization, but it had problems such as the column clogged.

POPs pretreatment devices had matured products in abroad, such as the portable SPME device developed by SUPELCO, the Infiltrex series produced by AXYS Canada and the TOPS (Trace Organics Platform Sampler) product of the New York Environmental Protection Agency. These products could meet the sample site pretreatment requirements, but the price was expensive. In China,

Content from this work may be used under the terms of the Creative Commons Attribution 3.0 licence. Any further distribution of this work must maintain attribution to the author(s) and the title of the work, journal citation and DOI.
Published under licence by IOP Publishing Ltd

there were no mature products, we urgently need to develop POPs analysis pretreatment device using extraction and enrichment technology. It would reduce the equipment and personnel operating requirements to meet on-site monitoring needs of POPs.

2. Extraction enrichment technology

In the various aspects of POPs analysis, the sample pretreatment took the longest time, accounting for 60% to 70% of the total analysis time. It also was the key link that affected the accuracy, reliability and reproducibility of the analysis results. The efficiency of extraction enrichment depended mainly on the adsorption capacity of the extraction medium on the target pollutants and the automation degree of the extraction enrichment device. Carbon nanomaterials had large specific surface area and stable properties, it was usually used as a filler to prepare extraction columns, but the extraction columns were prone to clog and needed a large amount of organic solvent to elute target contaminants. This paper will introduce a new extraction and enrichment technology, the magnetic nanoparticles were uniformly dispersed into the sample, adsorpted the target pollutants, and then it was separated from the sample by using the external magnetic field. Finally, it was transferred to the organic solvent, using the vortex, ultrasound and other means to elute.

From the perspective of technology integration, magnetic nanoparticles were the basis of the technology. Firstly, the nanoparticles needed to be magnetized, and its surface was modified, so that it had the best adsorption function for the specific POPs. We could use scanning electron microscopy to observe its morphology, and use powder X-ray diffraction to study crystal structure of composite materials, and use the contact angle tester to test surface hydrophilicity of nanoparticles. In addition, magnetic nanoparticles need to repeat extraction enrichment - elution experiments and test its stability, and ensure that the target pollutants adsorption performance consistency.

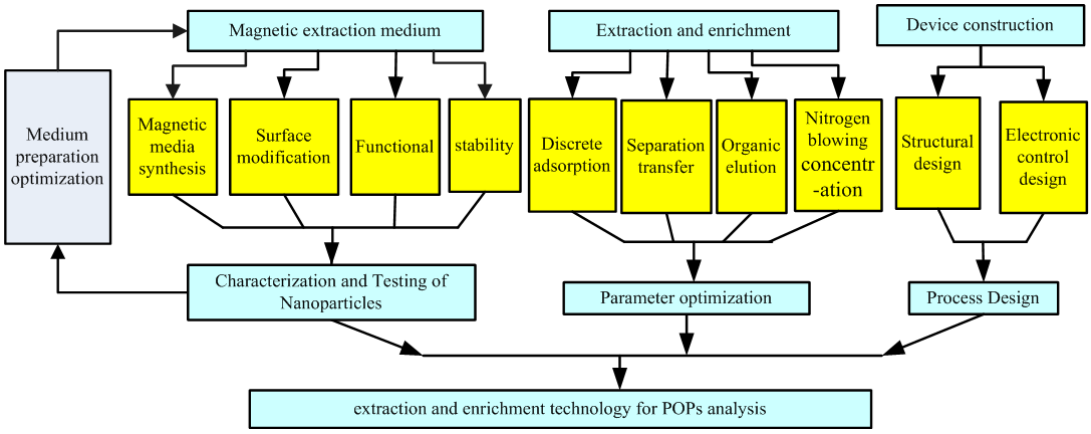

Figure 1. Extraction and enrichment technology route

Firstly, added proper amount of magnetic nanoparticles to a quantitative water sample, and then discreted treatment, such as vortex, stirring and so on. Secondly, magnetic separation techniques were used to quickly separate the magnetic nanoparticles which carried the target contaminants from the sample. Two means were available, electromagnet separation and permanent magnet separation. The advantage of the former was that the control system was easy, but the disadvantage was that the effective range of the electromagnet was very low, there were remanence after power failure, and this would cause the measurement error. Permanent magnet could effectively avoid remanence error, but required a special structural design to meet the recovery and release of nanoparticles. Thirdly, the separated nanoparticles were transferred to a small amount of organic solvent to elute. In order to improve efficiency, we could combine using vortex or ultrasound. The eluate liquid was blew with nitrogen to a fixed volume, then it was used directly for subsequent analysis. Figure 1 showed the extraction and enrichment technology for POPs analysis.

3. Project design

Based on the above technical route, this paper developed a set of automatic pretreatment system with injection, distribution, extraction enrichment, elution and on-line concentration. And then completed the field POPs analysis through the follow-up gas chromatography, gas chromatography / mass spectrometry, high performance liquid chromatography and other means. In order to improve the efficiency of extraction enrichment or to produce parallel samples, the whole system could be set to multi-channel, and the parallel processing mode. The following would be a dual channel mode, for example, the mechanical structure design, electronic control system design and sample processing processes would be stated.

3.1. Structure design

Structure design followed the principle of compact, portable and easy to maintain. Design should fully reflect the high integration characteristics, try to use linkage structure as far as possible. Parts of the movement should be reasonable arrangements, the transmission structure to be simple and reliable, high precision. The pretreatment device of POPs analysis could be split into automatic sampling unit, discrete processing unit, recovery unit, transfer unit, organic solvent elution unit, nitrogen blown unit. Structural design was shown in Figure 2.

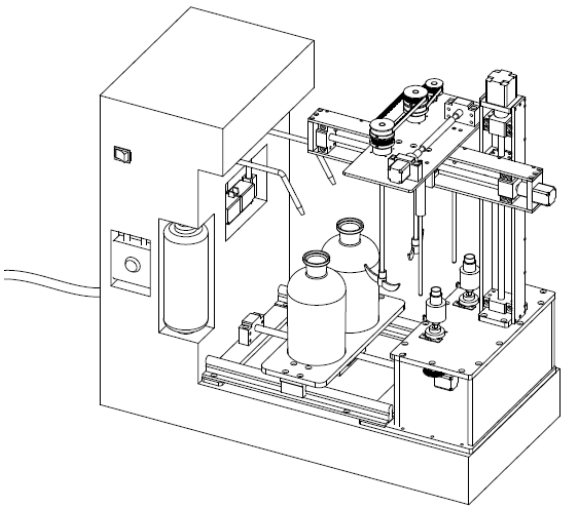

Figure 2. POPs analysis pretreatment device

The automatic sampling unit included the inlet tube, filter, peristaltic pump, dispenser, flow meter, solenoid valve, outlet and other necessary piping. The sample entered in the filter by a peristaltic pump, filter out impurities in the sample to reduce subsequent interference, so that improved the ability of magnetic nanoparticles to absorb the target compounds. The sample was automatically distributed by the dispenser, and the sample volume was monitored by the flow meter. After the preset flow demand was reached, the automatic injection was cut off by the solenoid valve.

The discrete processing unit was realized through mechanical stirring. The head of the stirring rod was two-chip, the outer layer was enveloped by PTFE to reduce the adhesion of magnetic nanoparticles. The two blades were naturally pendulous and easily entered in the sample bottle. When the stirred motor started, the blade became "eight" shape under the action of centrifugal force, which could stir the sample. To reduce the number of motors and IO port of control unit, The system adopts synchronous belt transmission. The design parameters of synchronous belt were as follows:

The motor output speed (n_1) was 420 *r/min*, the output power (P) was 19.2*W*, the rotation speed of the stirring rod was set to 300 *r/min*.

$$P_d = K_A P = 1.5 \times 19.2 = 28.8W \quad (1)$$

P_d was design power, K_A was the working condition factor.

Checked arc tooth synchronous belt selection chart in the mechanical design manual, and chosen the circular toothed belt, model was 3M, pitch *Pb* was 3*mm*.

Small pulley teeth number (Z1) was 30. Diameter of small pulley pitch

$$d_1 = \frac{P_b Z_1}{\pi} = \frac{3\times30}{\pi} = 28.65mm \quad (2)$$

$$v = \frac{\pi d_1 n_1}{60\times1000} = \frac{\pi\times28.65\times420}{60\times1000} = 0.63m/s \quad (3)$$

Synchronous belt speed meet the maximum speed limit.

$$i = \frac{n_1}{n_2} = \frac{420}{300} = 1.4 \quad (4)$$

Transmission ratio meet the maximum transmission ratio limit.

Large pulley teeth number

$$Z_2 = iZ_1 = 42 \quad (5)$$

Large pulley pitch circle diameter

$$d_2 = \frac{P_b Z_2}{\pi} = \frac{3\times42}{\pi} = 40.11mm \quad (6)$$

Preliminary calculated center distance between pulleys a_0, considering the compact structure, the primary a_0 was 70mm.

$$0.7 \times (d_1 + d_2) < a_0 < 2 \times (d_1 + d_2) \quad (7)$$

Preliminary calculated the pitch length of the timing belt, took L_P = *252mm*, the corresponding number of teeth Z_b = *84*.

$$L_{op} \approx 2a_0 + \frac{\pi}{2}(d_2 + d_1) + \frac{(d_2 - d_1)^2}{4a_0} \approx 248.47mm \quad (8)$$

To simplify the structural design, the actual center distance "*a*" was not adjustable.

$$inv\frac{\alpha_1}{2} = \frac{L_p - \pi d_2}{d_2 - d_1} = 10.99$$

$inv\frac{\alpha_1}{2}$ was the involute function, α_1 was a small pulley covering angle. check the mechanical design manual involute function table, took $\frac{\alpha_1}{2} = 85°25'$.

$$a = \frac{d_2 - d_1}{2cos\frac{\alpha_1}{2}} = 71.75mm \quad (9)$$

The number of mesh teeth with small pulley meet the minimum number of mesh teeth limit.

$$Z_m = ent\left[\frac{Z_1}{2} - \frac{P_b Z_1}{2\pi^2 a}(Z_2 - Z_1)\right] = 14 \quad (10)$$

Synchronous Band Bandwidth b_s, Took $b_s = 6\text{mm}$.

$$b_s \geq b_{s0}\sqrt[1.14]{\frac{P_d}{K_L K_Z P_0}} = 3.98 \quad (11)$$

P0 was the reference rated power, using the interpolation method to calculate the *P0* was 0.051 *kW*.b_{s0} was the reference width of the 3M band type, took 6mm. K_Z was coefficient of mesh teeth with small pulley ,took 1. K_L was coefficient of arc tooth belt length coefficient, took 0.9.

Recovery unit used permanent magnet program, the test process found that the effect of the spherical magnet in series was better. The spherical magnet chain was placed in thin-walled glass tube which had closed bottom. The scroll rotated by the motor driving, and the spherical magnet chain was moved up and down in the glass tube through pulling of the string. This could realize the aggregation and abscission of the nanometer material on the outer wall of the glass tube. The recovery unit and the discrete processing unit were designed on the same support plate, the latter was close to the automatic injection unit.

The design of the transfer unit was mainly to meet the connection of each process. The sample bottle and the elution bottle were laid in a straight line, the stirring rod and the glass tube were sequentially entered into or removed from the corresponding glass bottle while working, and this was realized by the aid of a precision cross slide. The support plate with the recovery unit and the discrete processing unit was parallel to the ground and fixed with the slider of the beam. The stepper motor drove the precision ball screw to move the slider, then the stir bar and the glass tube moved between the sample bottle and the elution bottle. The beam was fixed with the slider of the stringer, and the stepper motor at the top of the stringer drove the precision ball screw to move the slider, so that the stir bar and the glass tube could entered into or removed from the sample bottle or the elution bottle. The precise position of each step was controlled according to proximity switch feedback signal.

The elution unit extended the glass tube which had gathered the magnetic nanoparticles on the outer wall into the organic solvent reagent bottle, low velocity vortex. Then the glass tube was removed, the high speed vortex was started, and the target pollutant was accelerated elution in the organic solvent. Motor driven eccentric reagent bottle rotation to produce vortex, and switched high and low speed operation through the control system. The elution unit also used the synchronous belt, the parameter calculation refer to discrete processing unit.

The nitrogen blowing concentration unit mainly realized the online concentration of eluting liquid, and the concentration of pretreatment sample could be improved by using nitrogen blowing to meet the detection ability of the subsequent analyzer.

In addition, in order to cooperate with the automatic sampling device and avoid interference between the sampling port and the transfer unit, the sample bottle platform was designed to be movable. Screw nut and load platform were fixed together. They were drove by the stepper motor. In order to maintain smooth movement, two rolling contact rails were placed in parallel on both sides of the screw.

3.2. Control system design

The main components of pretreatment device included peristaltic pumps, flow meters, solenoid valves, 2 DC motors, 4 stepper motors, and 8 proximity switches. Considering the power consumption and system requirements of the field applications, the whole control system used 32-bit STM32F107 chip as the core processor of the device. The control system mainly included the driving module, the proximity switch detection module, the keyboard module, the analog signal detection module, the power module, the PWM module and the display module.

STM32F107 produced 6-way PWM signal to drive the 4-way stepper motor and the two-way DC motor, then realized speed adjustment and steering control. When the mechanical parts reached the specified position, the proximity switch was triggered. At the same time, pulse detection channel detected the signal changes, then notified the CPU to output or stop the PWM signal. 5 way key switch were the manual control interface, controlled mechanism movement of the pretreatment process step-by-step, so that optimized the movement parameters. The other 1 way key switch could start the automatic operation mode. The key detection module switched the different flows by detecting whether the key was pressed. Key switch and capacitors in parallel could eliminate jitter while some keys release, combined with software processing could prevent system misuse. The power supply module supplied power for the DC motor and the stepping motor. In addition, the LM2576-5 chip and the AMS1117 chip were respectively used for the proximity switch and the CPU power supply on the control board.

4. Nano-particle recovery experiment

The following experiment was carried out to study the performance of magnetic nanoparticle recovery-transfer- recovery for the POPs analysis pretreatment device. The 20mg, 40mg, 60mg, 80mg and 100mg magnetic nanoparticles were dried with nitrogen. They were added into the 1000mL extraction bottle, and then automatically injected 500mL ultra pure water and stirred for 1min. After stopping for 20s, the nano-particle recovery unit was started and transferred to the organic solvent elution bottle after 30s. The permanent magnet was lifted, low-speed vortex for 10s, the permanent magnet was discharged, the magnetic nanoparticles were collected, using the nitrogen to dry, then weighed. The experimental results were recorded in Table 1, and the recovery mass was multiple averages.

Table 1. Recovery of nanoparticles

Number	magnetic nanoparticles **(**mg**)**	recovery mass **(**mg**)**	recovery rate
1	20	16.2	81%
2	40	37.3	93.3%
3	60	53.8	89.7%
4	80	69.4	86.7%
5	100	72.6	72.6%
6	120	73.2	61%

5. Conclusion

The device was highly integrated, which could achieve injection, extraction enrichment, elution function of POPs analysis, multi-channel design program greatly improved the pre-processing efficiency and consistency, and reduced manual operation differences. However, the experimental results showed that the recovery rate of magnetic nanoparticles was low at present. The recovery rate gradually decreased when the added amount increased, even appeared saturation phenomenon. This meant that exceeded the adsorption capacity of the recovery unit. If the adsorption efficiency of modified magnetic nanoparticles on different target pollutants was considered, the recovery rate of POPs would be more lower. The improvement direction mainly had the following three points: Firstly, optimize the modified magnetic nanoparticles. Secondly, When experiment need to add a large amount of nanoparticles, improve recovery methods (such as glass tube move up and down in the sample bottle to increase contact recovery chance, or consider multiple times recovery and elution). Thirdly, optimize the mixing speed, discrete time, recovery time and other experimental conditions.

Acknowledgments
The authors acknowledge funding from National Natural Science Foundation (41406105), National Po-stdoctoral Fund (2015M582134), Natural Science Foundation of Shandong Province (No.ZR2016DM17).

References
[1] J. Gao, L. Liu, X. Liu, J. Lu, H. Zhou, S. Huang, Z. Wang, P.A. Spear, ENVIRON INT, 34 1097-103 (2008)
[2] L. Peng, X. Dai, A. Yu, CHEMOSPHERE, 119 S138-44 (2015)
[3] R.J. Wenning, L. Martello, R.J. Wenning, L. Martello, POPs in Marine and Freshwater Environments (Elsevier Inc.:2014)
[4] N. Djabou, M.E.A. Dib, B. Tabti, J. Costa, A. Muselli, J ESSENT OIL RES, 26 393-99 (2014)
[5] S.X. Peng, T.M. Branch, S.L. King, ANAL CHEM, 73 708 (2001)
[6] M.D. Le, H.A. Duong, M.H. Nguyen, J. Sáiz, H.V. Pham, T.D. Mai, TALANTA, 160 512 (2016)
[7] J. Duval, E. Destandau, V. Pecher, M. Poujol, J.F. Tranchant, E. Lesellier, J CHROMATOGR A, 1447 26-38 (2016)
[8] A. Amelio, L. Loise, R. Azhandeh, S. Darvishmanesh, V. Calabró, J. Degrève, P. Luis, B.V.D. Bruggen, FUEL PROCESS TECHNOL, 142 352-60 (2016)
[9] L. Xing, J. Song, Z. Li, J. Liu, T. Huang, P. Dou, Y. Chen, X.M. Li, T. He, J MEMBRANE SCI, 520 596-606 (2016)
[10] D. Sabaliūnas, A. Södergren, ENVIRON POLLUT, 96 195-205 (1997)
[11] J.Pawliszyn Solid -phase Microextraction -theory and Practice (New York:Wiley VCH,1997)
[12] M.D. Davis, ANAL CHEM, 75 71-77 (2003)