Paver automation for road surfacing

A Tihonov[1] and V Velichkin[1]

[1]Moscow State University of Civil Engineering, Yaroslavskoye Sh. 26, Moscow, Russia, 129337

E-mail: VelichkinVA@mgsu.ru

Abstract. The paper discusses factors that bear on the quality of motor road pavement as access roads and highways are built and used. A block diagram is proposed to organize elements of the automatic control system to control the asphalt paver's mechanisms; the system is based on a microprocessor onboard controller to maintain preset elevation of the finishing plate; description of its operation principle is offered. The paper names primary converters to control the finishing plate elevation. A new control method is described to control the machine's straight-line movement with GLONASS Satellite Positioning System (SPS) during operation.

1. Introduction

Intensive traffic of different motor vehicles going at high speeds and braking hard require hard pavements with high operation properties, which greatly reduces related maintenance and repair costs [1].

The issue has become particularly important now that construction and reconstruction of both highways and access roads is done on such large scale yet quality of even newly built roads that leaves much to be desired and fails to meet the requirements of operation.

Main advantages of hard-paved roads such as bituminous concrete and cement concrete include:

– great strength, and thus long service life;

– lasting surface and long repair cycles with low maintenance costs;

– sufficiently rough pavement surface ensuring reliable adhesion to support fast speeds and accident-free motor traffic [2].

Higher quality of pavement and surface laying is ensured by better organization of personnel, by road-building equipment with superior performance, by working process automation, and close control of each production step, including compacting the earth base under the pavement [3-7].

Practice of pavement building both in Russia and worldwide has demonstrated that the above indexes are possible in most cases only if the machines used to pave asphalt-concrete airfield runways, highways and driveways in urban areas are automated [7].

One of possible methods to address the above objectives is to have road building machines, including asphalt pavers, equipped with microprocessor-based IT systems, which can at the same time improve the operator's working conditions (by reducing mental stress), and control road building processes in semi- or fully-automated mode, thus boosting the output and quality of solid pavement building [1].

Incorrect construction technology that compromises thickness and regularity of the pavement, caused by failure to maintain the mix temperature, paving rate, failure to use the packers meant to improve the road surface quality, raise construction costs, reduce service life of pavement and make for shorter intervals between repairs.

Content from this work may be used under the terms of the Creative Commons Attribution 3.0 licence. Any further distribution of this work must maintain attribution to the author(s) and the title of the work, journal citation and DOI.
Published under licence by IOP Publishing Ltd

2. Methods. An Experimental section

Practice of pavement building both in Russia and worldwide has demonstrated that the above is possible in most cases only if the machines used to pave airfield runways, highways and driveways in urban areas are automated.

The machine's main working process is spreading the mix over the roadbed width to the required thickness. Quality of a self-propelled paver operation is described by invariable thickness and regularity of the layer.

On the frame between the caterpillar tracks, the machine has a screw-type feeder with a conveyor to move the concrete mix from the hop; the mix comes into the hop from dump trucks (Fig. 1). The device spreads the mix over the width of the strip, while the function of the finishing plate – the machine's actual working tool – is to finally spread the mix over the strip width and pack it by the plate's weight. As the machine is used, the operator needs to control the plate elevation above the laying surface, within 2-3 mm elevation range with cross inclination up to 10-12°. In real life, the operator is unable to manually maintain such error-level while driving the machine at the same time. It has to be considered that external disturbances caused by irregularity of the base, shifting the working tool from its preset position, are random and fleeting by nature, with periodical/undulating irregularities with wavelengths about 10 meters, and mean-squared departure of vertical marks to the tune of 0.64 – 1.6 cm – not compliant with the SNIP. All those are main reasons to use automatic control of the finishing plate position. To develop any automatic control system (ACS) for finishing plate positioning, one needs to consider the specific cinematics of the machine's working tool, namely that the plate's vertical motion drive must at the same time ensure its cross inclination control; therefore, control has to consider three parameters: moving up, moving down, and cross inclination angle. This creates the need for two elevation meters that must be mounted on both beams of the finishing plate.

Elevation coordinates for the ACS to compare current and preset parameters are input by the element structure for control of actuators with discrete/relay output depending on the designed specifics of the machine's drive.

From dump truck 1 moved in the course of unloading by propulsive force of rollers 2, the paving mix is moved into receiving hopper 12 (Figure 1). The bottom plate of the hopper has two scraper-type (apron) supply conveyors 4, which feed the material over the hopper's smooth bottom towards two cross screws 5, which in turn spread the bituminous concrete mix over the width of the strip. Moving speeds of the feeders are synchronized with the paver's moving speed. The thickness of the paving mass served to the screws is controlled by slide gates mounted on the hopper's rear side. The screws have independent drives synchronized with respective feeders.

Through slide gates 3 controlling the amount of the mix served, the feeders move it to distributing screw 5. Distributed mix flows under bar 11 that oscillates with frequency 25 Hz. Finishing plate 7 that is connected to the working tool frame ensures the preset paving profile. The operator uses control 15 to adjust the height of the paving profile during result, to set the finishing plate (FP) to the required elevation.

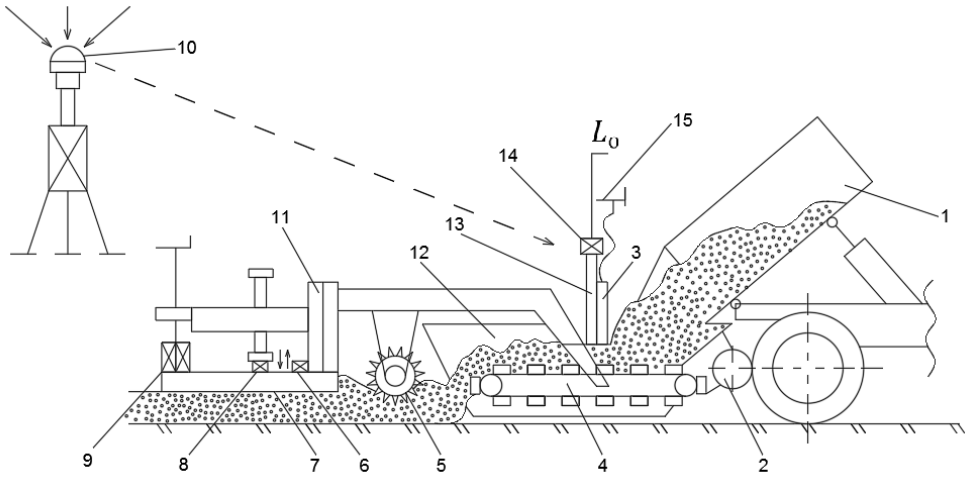

Figure 1 - Schematic diagram of working mechanisms in a road paver
1 – dumper; 2 – rollers; 3 – layer height adjusters; 4 – apron feeders (2 feeders on each side of the receiving hopper); 5 – cross screws (2 pcs.); 6 – sensor of cross-track turning angle of the finishing plate; 7 – finishing plate; 8 – control sensors for finishing plate elevation (2 sensors on both sides of plate); 9 – finishing plate up-down elevation controllers (2 hydraulic cylinders with hydraulic boosters of system 3- Hz); 10 – satellite signal receiver of base station; 11 – packing bar; 12 – receiving hopper; 13 – mounting pole for signal receiver; 14 – receiver for signals for base station; 15 – pavement profile height control.

To automatically stabilize FP elevation, we propose a structural block diagram of control the asphalt paver's working tools (Figure 2).

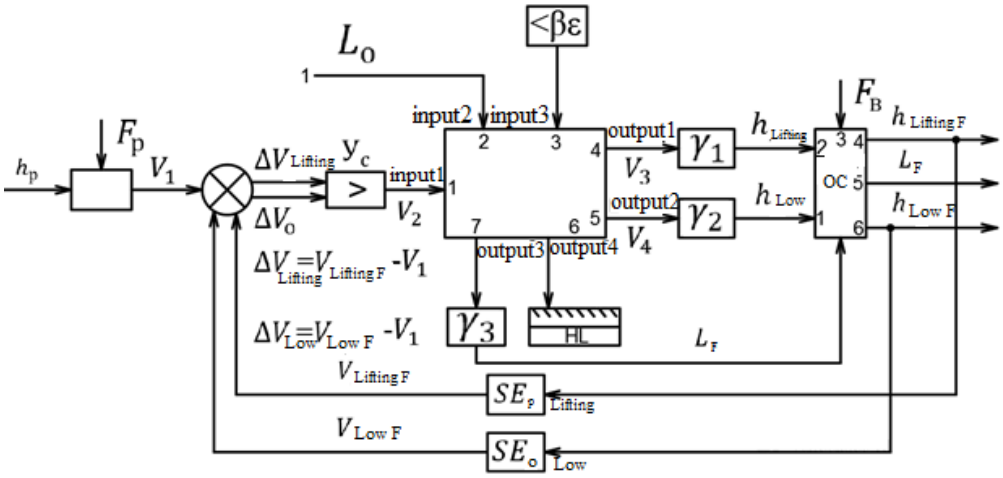

Figure 2. Schematic block diagram showing elements of the microprocessor automatic control system of paver mechanisms to maintain preset elevation of the finishing plate
ES – finishing plate elevation selector; CE – comparison elements for actual and preset elevation of finishing plate; YC (>) – input amplifier; OMC – onboard microprocessor controller; Y_1, Y_2, Y – hydraulic cylinders to control, respectively, up and down elevation of FP, longitudinal movement direction of FP; < βE – control sensor for cross angle of FP inclination;
HL – instrument to show the FP inclination angle; CI – controlled item (machine); SE_p, SE_o – elevation control sensors, up (P) and down (O) FP; F_p, F_b – controlling and external disturbance

factors; ΔU_p, ΔU_o – signals to report mismatch between preset (U_1) and actual ($U_{lifting\ F}$, $U_{Low\ F}$) control parameters; L_o , L_F – longitudinal movement directions of the machine;h_p, h_o, $h_{lifting\ F}$, $h_{Low\ F}$,– FP elevation values, preset and actual, considering external influences F_b.

The system ensures that the position of the finishing plate remains stable relative to preset parameters and maintains settings for the pavement profiles lengthwise and across. The layer thickness changes automatically depending on irregularities of the roadbed.

With the above in mind, the structural block diagram of the ACS for the paver's working mechanisms consists of two elevation height control sensors FP SE_p, SE_o, mounted on the beams that support the FP, and one angle control sensor $< \beta E$ for lateral inclination of the FP, from which signals go to the display of HL from "Output 4" of the OMC. The Onboard Microprocessor Controller (OMC) is the main control device that receives signals to "Input 1" - ΔU_p, ΔU_o (FP up and down), to "Input 2" – control of the machine's movements forward-backwards, to "Input 3" – control of FP cross inclination. Processed signals from OMC "Outputs" go to hydraulic cylinder controls of the working tools: "Output 1" – Y_1 (h_p –FP up), "Output 2" - Y_2 (h_o - FP down), "Output 4" - Y_3 – toggle forward-backwards movement of the machine.

A copy rope and a probe sensor are now used as trackers that determine the preset forward-backward movement. The sensor probe slides along the cam, and when the machine diverts from the preset lengthwise direction, the sensor issues a signal that activates the electric magnet of the hydraulic cylinder's slide gate which returns the working tool frames to the original position.

This movement direction control method has serious disadvantages that reduce the machine's output because of downtime during road paving:

- need to used manual work to reset the pulling wire from time to time in new sections of the motor road;
- the tracer wire may sag;
- the probe sensor tends to lose contact with the wire when the machine moves at speeds faster than 20 km/h.

Engaging GLONASS SPS seems to be a promising solution: this satellite positioning system is serially available and its purposes include automation of road-building machines.

A cluster of satellites keeps transmitting precisely synchronized radio signals to receiver 10 of the base station (Figure 1), installed on a route with known coordinates. Another receiver 14 is mounted on the vehicle and picks signals transmitted by the radio mode from receiver 10. Receiver 14 then computes its coordinates and communicates them to "Input-2" by command A issued by the onboard microcontroller (Figure 2), which calculates the machine's precise position and thus determines the direction of its straight-line movement, and if necessary, works together with "Output-3" to adjust the direction by engaging hydraulic valve Y_3.

3. Conclusions

To furnish all relevant information to the operator, we propose a microprocessor-based automatic control system with a number of sensors mounted on the machine's different assemblies, and an onboard microprocessor controller, which on the operator's instructions will process the information and issue control commands to working mechanisms, and report the system's status with digital, light and sonic alarms.

The microprocessor system and the display used to report the process of paving in real time will analyze working mode departures from permissible control parameter ranges and cause changes in the machine's controls.

The system ensures:

– control of the working tool as programmed while bituminous concrete mix is being laid on radial road sections, to maintain the preset cross inclination (profile);
– preset thickness and regular smooth pavement;

– permanent speed and longitudinal motion of the paver;
– readings on the machine's status parameters while paving.

In addition, the controller can display information about the length of pavement laid, average paving speed and output. This information enables work progress accounting and assessment of the paver's performance. Once implemented, the system will raise the level and competitive ability of pavers in Russia, improve working conditions for operators, raise quality of pavements, and cut the costs of road repairs and maintenance on motor roads of various categories.

References

[1] Kochetkov A V 2008 Modern machines for road surfaces with a rough surface (Moscow, Higher School)
[2] Efremov L G 1991 Construction and repair of asphalt concrete pavements (Moscow, Higher School)
[3] Overeem A, Leijnse H and Uijlenhoet R 2013 Country-wide rainfall maps from cellular communication networks *Proceedings of the National Academy of Sciences of the United States of America* **110(8)** pp 2741-2745
[4] Chernoff R C 1979 Large Active Retrodirective Arrays for Space Applications *IEEE Transactions on Antennas and Propagation* **27(4)** pp 489-496
[5] Di Matteo A, Pettinelli E and Slob E 2013 Early-time GPR signal attributes to estimate soil dielectric permittivity: A theoretical study *IEEE Transactions on Geoscience and Remote Sensing* **51(3)** art. 6276249
[6] Ghose R N 1964 Electronically Adaptive Antenna Systems *IEEE Transactions on Antennas and Propagation* **12(2)** pp 161-169
[7] Ginzburg A and Skiba A 2014 Creating an urban area planning design based on the theory of fuzzy logic *Applied Mechanics and Materials* **584-586** pp 507-511