PAPER • **OPEN ACCESS**

Harmonization of a reservoir operating regime for sustainable water supply to a megalopolis

To cite this article: A Tskhai and V Kirillov 2019 *IOP Conf. Ser.: Earth Environ. Sci.* **317** 012011

View the article online for updates and enhancements.



This content was downloaded from IP address 118.26.170.129 on 26/09/2019 at 10:53

Harmonization of a reservoir operating regime for sustainable water supply to a megalopolis

A Tskhai[1] and V Kirillov[2]

[1] Principal Researcher, Institute for Water and Environmental Problems, Siberian Branch, Russian Academy of Sciences, Barnaul, Russia. Professor, Altai State Technical University, Barnaul, Russia
[2] Head of Laboratory, Institute for Water and Environmental Problems, Siberian Branch, Russian Academy of Sciences, Barnaul, Russia.

E-mail: taa1956@mail.ru

Abstract. The study is aimed at sustainable water supply to a megalopolis through preserving the ecosystem of the reservoir – the source of water resources for the city. The novelty is in the approach, application of which can prevent mass zooplankton death caused by surplus water spills from the reservoir in summer and autumn. Structural-dynamic modeling of the reservoir ecosystem state is used to analyze the environmental impact of different options of water use schedule.

1. Introduction

For cities, where reservoir resources are the main source of water supply, updating of the reservoir operation rules is a problem of great concern. Water resources of the reservoir are used for water supply, energy production, irrigation, recreation, etc. On the one hand, water consumption by rapidly developing industrial enterprises and public service is growing nowadays, but on the other – natural ecosystem conservation and restoration imply specific, often alternative requirements to water management.

An approach to the regulated runoff distribution for mitigation of biological and geomorphological effects in the Kor-river basin (Iran) is proposed in [1]. A general optimization-based approach is proposed to consider simultaneously the multiple anthropogenic uses of the reservoir and desirable ecological releases represented by parameters that capture the flow regime [2]. A modeling technique using a cascade hierarchical approach was proposed and tested on 614 km2 of the upper river basin in the center of Idaho (USA); it allowed to assess the impact of water storage changes on the aquatic ecosystems of downstream water [3]. An attempt to choose the most suitable ecological runoff from five operation modes of the Jinghong reservoir in the Mekong river basin to ensure stability of the river ecosystem was made in [4]. The mentioned studies are united by an idea of searching for an acceptable reservoir operation mode that could make the discussed problem solvable if input data are available.

An approach to the solution of the problem on controlling water outflow from the Ivankovo reservoir (the Volga-river, the Tver administrative region) to the downstream in order to avoid surplus water spills was formulated in [5]. Surplus spills are used in the water management practice to avoid a reservoir overfilling above normal headwater level (NHL). However, they increase the electricity

Content from this work may be used under the terms of the Creative Commons Attribution 3.0 licence. Any further distribution of this work must maintain attribution to the author(s) and the title of the work, journal citation and DOI.
Published under licence by IOP Publishing Ltd

shortage recently experienced by large cities. The cited study does not consider the environmental consequences in case of application of the proposed approach. The largest metropolis of Siberia, Novosibirsk, which uses water resources of the Novosibirsk reservoir and its downstream water for municipal needs, is a vivid example of complex environmental and economic problems.

Along with the energy problem, surplus water spills (see short-term peaks in the upper graph of Figure 1) bring to adverse environmental aftereffects. Technical hydrobiology faces the problem of mass death of zooplankton when HPP implements idle water discharges in summer- autumn periods. For example, in the autumn of 2007 there was a mass deposition of organic matter formed by dead zooplankton organisms on filters of the Novosibirsk "Gorvodokanal" stations [6]. Besides high costs of filters cleaning, ecologists worry about mass destruction of organisms community responsible for the aquatic ecosystem sustainability all the year round.

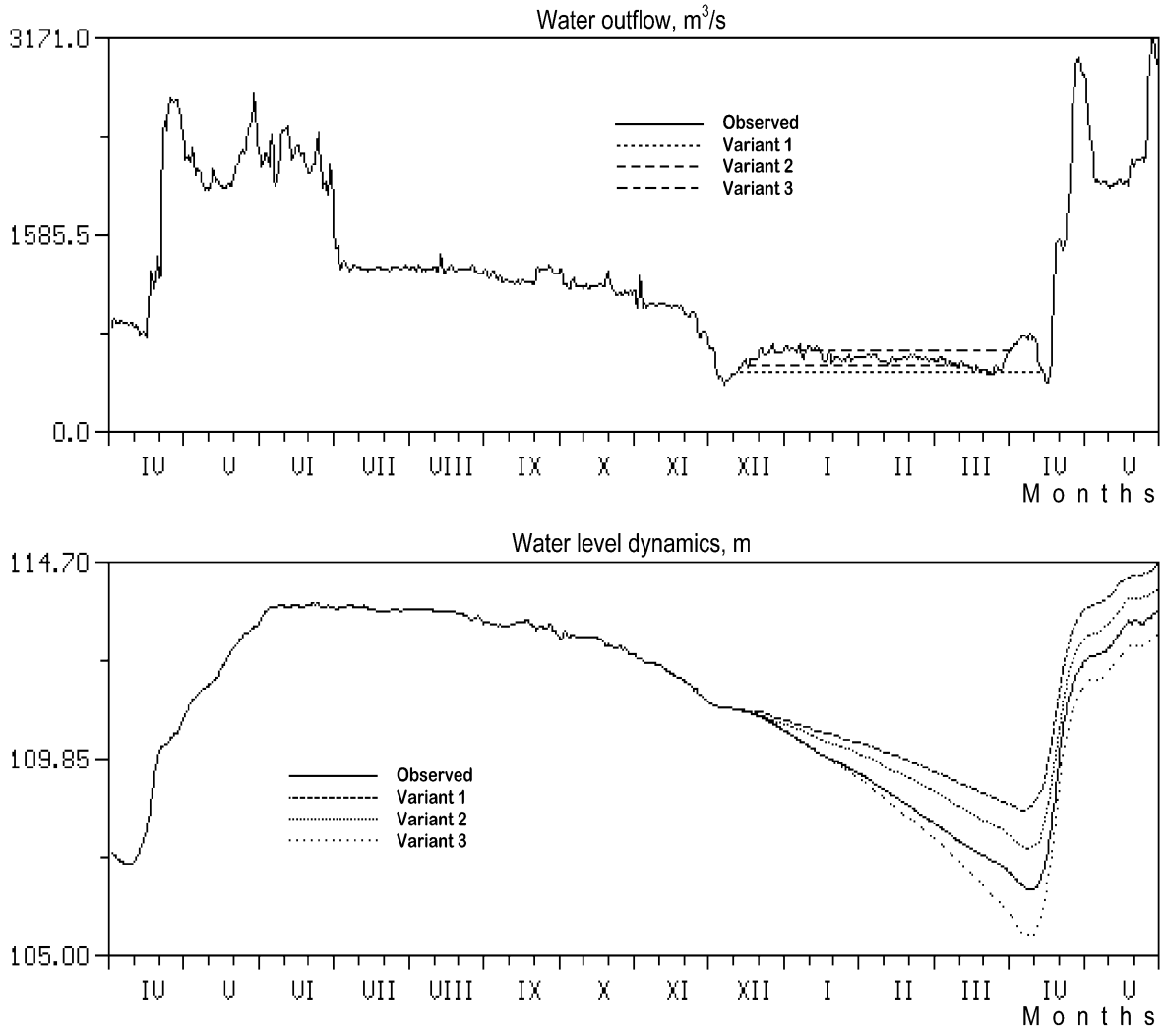

Figure 1. Discharge rate of the Novosibirsk reservoir release and its water level in the 1981–1982 hydrological year

The proposed article submitted for consideration presents the approach for solving this environmental problem.

2. Methods and materials

To assess the state of the Novosibirsk reservoir ecosystem, the mathematical modeling of the aquatic ecosystem development uses the description of natural biogeochemical cycles of transformation of nitrogen and phosphorus compounds limiting the changes in biomass of aquatic communities [7–8]. The mentioned research give the description of the creation, verification and application of the "Biogen" model for assessing the state and forecasting the hydrobionts development depending on factors dynamics, including for a long-term period as well.

Transformation and dynamic behavior of 15 C_i variables are modeled (Figure 2). Nine of the variables are related to the water column: ZO – zooplankton biomass; F – phytoplankton biomass; $N\text{-}NH_4$, $N\text{-}NO_2$, $N\text{-}NO_3$ mineral forms of nitrogen; D – suspended solids; C – dissolved organic matter; I – mineral phosphorus; O_2 – oxygen. Six ones belong to bottom sediments (DO): CB – organic matter involved in metabolic processes; interstitial phosphorus and nitrogen compounds– P_B and N_B; adsorbed on the solid phase – P_S and N_S. Variable C_N denotes passive organic matter (in nitrogen units) in the sediment skeleton.

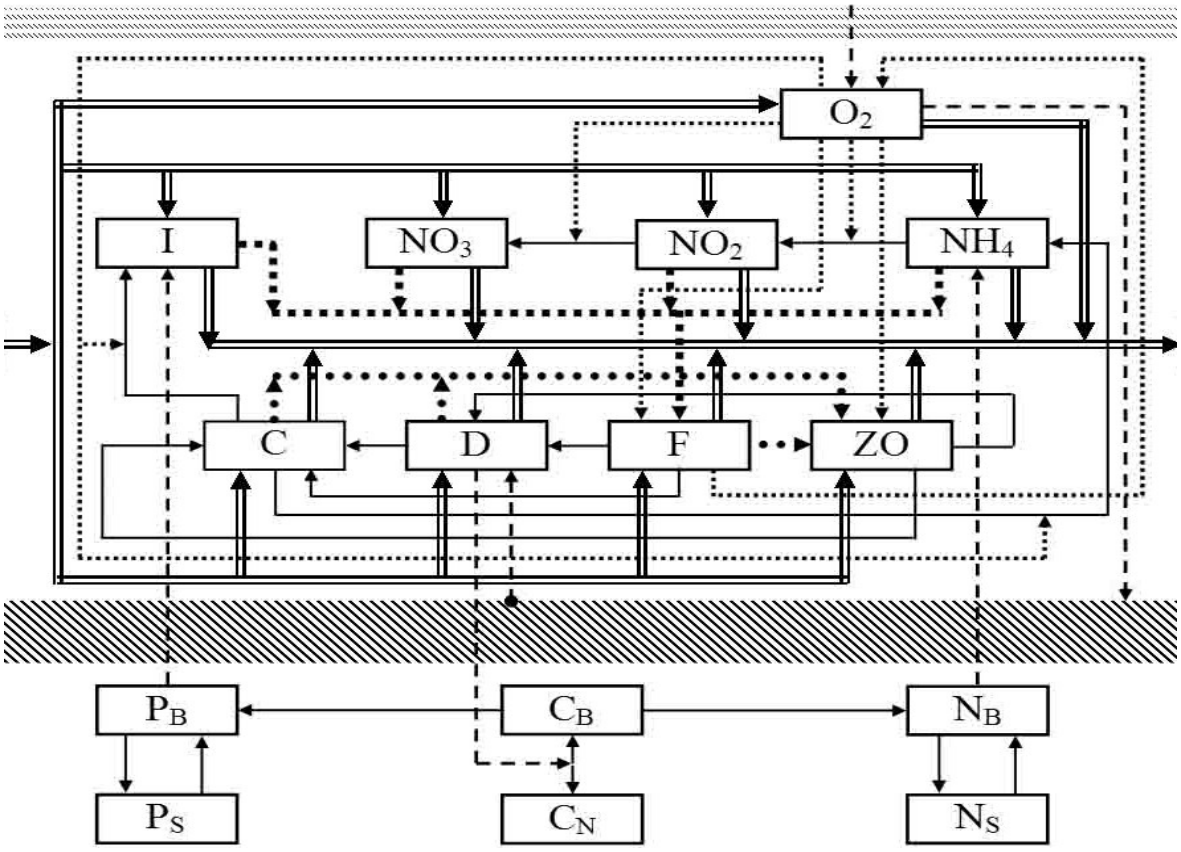

Figure 2. A scheme of biochemical components transformation in the aquatic ecosystem according to the modified model "Biogen"

To describe the transformation of compounds in the water column, the model equations in a zero-dimensional approximation look as follows:

$$\frac{d(C_i \cdot W)}{dt} = W \cdot R_i + Q^p \cdot C_i^p - Q_- \cdot C_i + J_i \cdot \Omega + G_i \cdot L \quad ,$$

where i = ZO, F, NH_4, NO_2, NO_3, D, C, I, O_2; W – the reservoir volume ; t – the time; R_i – the rate of biochemical transformation of compound C_i; Q^p and C_i^p – the discharge rate of the river and i-th component concentration; Q_- – the discharge rate of release from storage; J_i – the mass flow on the interface; Ω – the surface water area of the reservoir; G_i – the lateral load of diffuse pollution; L – the length of the reservoir shoreline.

In the 70s of XX century, anthropogenic and climatic changes resulted in eutrophication processes development in the Novosibirsk reservoir, which trophic status was attributed to the oligomesotrophic type. At present, based on the study of chlorophyll "a" in the summer-autumn of 2007–2013, hydrobiologists determine the reservoir as "a water body of eutrophic type in accordance with average concentrations during the open water period and with long–term data... it is weakly eutrophic... the highest recorded values of chlorophyll "a" (up to 45.5 mg/m^3) are indicative of its highly eutrophic level. One-time concentrations of chlorophyll "a" up to 298–316 mg/m^3 during the water blooming season induced by local and short-term mass development of cyanoprokaryotes are evidence of its hypereutrophic level that is a factor of environmental risk for fishery and recreational use of the reservoir, household and drinking water supply" [9].

The application of traditional methods to modeling natural biogeochemical cycles did not allow to reproduce the long-term trend of eutrophication development. To account for changes in the trophic status of the reservoir, the model of aquatic ecosystem state was modified in [8]. At each temporal step of calculations, unlike traditional methods, not one but several sets of simulated variables (including biomass of aggregated ones) were considered. Then, the set providing maximum exergy – which characterizes a level difference of energy present in a live system and a "dead" substance – was selected. Basically, such an approach is close to the understanding of the Darwin's evolutionary principle on natural selection as the tendency to the adaptation increasing of a living system to changes.

3. Results and discussion

The analysis of the interannual variability of phytoplankton for 23 years of the reservoir operation shows that in the low-water years the abundance of cyanoprokaryotes increases and leads to more intensive water blooming in summer [9].

To estimate the worst option in terms of water quality, the modified model was used for calculations with reproduction of the same scenario of the low-water conditions of 1981–1982 for seven consecutive hydrological years.

The calculations indicate that starting from the second calculation year, there is a clear increase in phyto- and zooplankton amount in summer-autumn as compared to similar periods of the previous years (Figure 3).

This gives grounds to expect the aggravation of environmental consequences caused by surplus water spills in summer-autumn over the years.

To solve this problem, the ecosystem peculiarities of the operating reservoir should be taken into account. Reduction in the reservoir level below NHL in summer-autumn can be a way out in order to avoid NHL excess during summer – early autumn for excluding of surplus spills as well. At the same time, we should keep in mind one more probable after effects of the planned water level decrease, which can bring to a water level fall below dead volume level (DVL) in the end of the winter low-water period, especially in dry years. In some years, it occurs even at the current operating regime of the reservoir.

Special calculations were carried out to assess the impact of the Novosibirsk reservoir release to the DVL and up to 1, 2 and 3 m below DVL on its aquatic ecosystem during a low-water, before the flood period when the reservoir fills up to NHL.

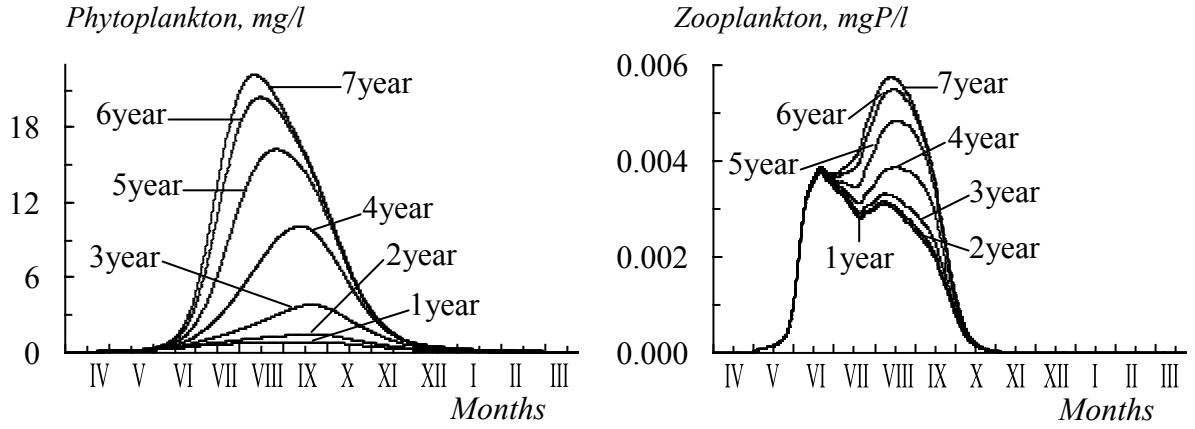

Figure 3. Phyto- and zooplankton dynamics in the Novosibirsk reservoir for seven year simulation with recurring low-water conditions of the 1981–1982 hydrological year

The following equation was used to calculate the water balance:

$$\frac{dW}{dt} = \Omega \cdot \frac{d\overline{H}}{dt} = Q_{+} - Q_{-}, \quad (1)$$

where Q- and $\overline{H}(t)$ – the reservoir water level in the head tail according to regime daily observations for the 1981-1982 hydrological year.

Ω was founded based on the Novosibirsk reservoir morphometry. The current surface inflow discharge is determined by the equation (1) Q+ = Q+(t) with further selection of the following options for river regulation (see Fig. 1).

Actually, the water level was 1 m 87 cm below DVL.

Scenario options 1–3 coincided with a real one until December, then using the calculations we selected constant (during the period before the flood) value of release discharge rate to decrease the reservoir level up to DVL minus 1 m in option 1, and to the DVL minus 2 m in option 2, and to 3 m below DVL in option 3.

In other words, as compared to the real situation, the release was "held" so that a water level reached DVL minus 1 m in the first option, DVL minus 2 m – in the second, etc. The results of calculations are presented in Figure 4.

The model calculations are indicative of dilution processes as a major factor in substance concentrations in the Novosibirsk reservoir under changing low-water flow in winter. The proposed options for reducing the release level of the Novosibirsk reservoir in winter low water by 1–3 m below DVL will lead to a change in the average volume of simulated substances concentrations within 10%, therefore, the discussed change of the reservoir pollution is insignificant.

4. Conclusion

In order to prevent surplus spills-induced mass death of zooplankton providing the aquatic ecosystem stability in the reservoir throughout the year, the reservoir water level should be lower than NHL until the end of summer-autumn rainfalls in the river basin. The presented results are evidence of the possibility to avoid undesirable environmental consequences currently existing in water management.

To make a decision on any real change in the regime for exploitation of the Novosibirsk reservoir, a comprehensive consideration of probable aftereffects is required.

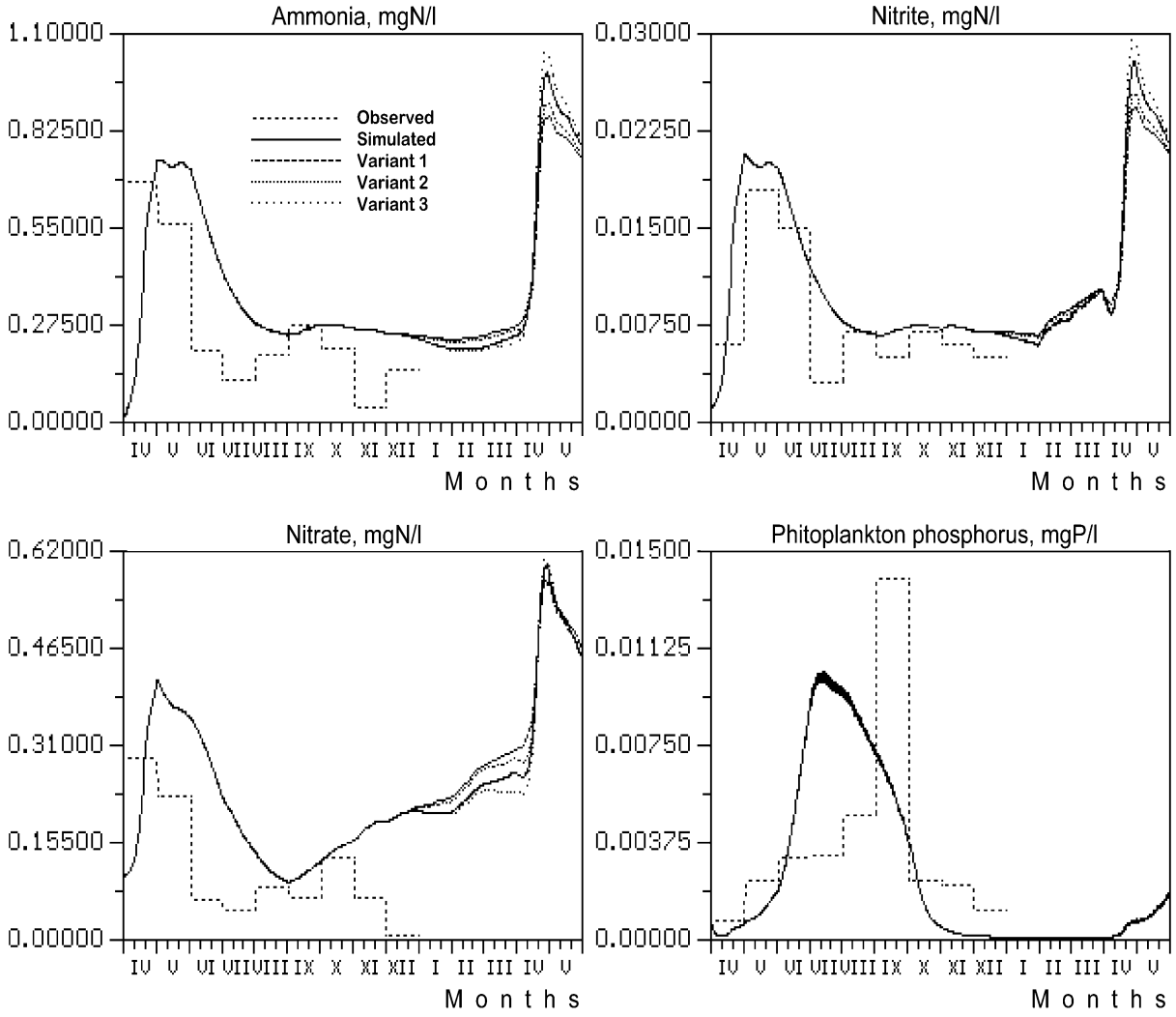

Figure 4. A comparison of water quality dynamics in the Novosibirsk reservoir for different options of water level decrease during winter of the 1981–1982 hydrological year

Acknowledgments

The authors thank Dr V. Ageikov for his help in calculations.

The reported research was funded by the Russian Foundation for Basic Research and the government of Altai Krai of the Russian Federation, grant No. 18-41-220002.

References

[1] Haghighi A T and Klove B 2015 *Ecological Engineering* **82** 390–99 doi.org/10.1016/j.ecoleng.2015.05.035

[2] Wang H, Brill E D, Ranjithan R S and Sankarasubramanian A 2015 *Advances in Water Resources* **78** 9–21

[3] Tranmer A W et al 2018 *Ecological Modelling* **368** 78–93 doi.org/10.1016/j.ecolmodel.2017.11.010

[4] Li D, Wan W and Zhao J 2018 *Journal of Hydrology* **563** 510–22 doi.org/10.1016/j.jhydrol.2018.06.031

[5] Kozitsin A S 2006 *Proc. of III Int. Conf. on Management. Problems (Apr 6–8, 2006 Moscow)* (Moscow: Institute of Management Problems of RAS) 165–70

[6] Yermolaeva N I 2013 *Water: Chemistry and Ecology* **1** 127–33
[7] Tskhai A A and Ageikov V Yu 1997 *Water Resources* **24** 664–74
[8] Tskhai A A and Ageikov V Yu 2018 *Proc. of the Int. conf. on Lomonosov Readings in Altai (Nov. 13–16, 2018 Barnaul)* (Barnaul: AltSU publ. house) 539–47
[9] Savkin V M et al 2014 *Long-term dynamics of water-ecological regime of the Novosibirsk reservoir* (Novosibirsk: SB RAS publ. house)

Published under licence in *Journal IOP Conference Series Earth and Environmental Science*