IOP Conference Series: Earth and Environmental Science

PAPER • **OPEN ACCESS**

Development and Optimization of Road Power Generation Equipment via Gas Collection

To cite this article: Ke Zhong *et al* 2019 *IOP Conf. Ser.: Earth Environ. Sci.* **295** 042020

View the article online for updates and enhancements.

This content was downloaded from IP address 59.127.168.43 on 10/10/2019 at 04:13

Development and Optimization of Road Power Generation Equipment via Gas Collection

Ke Zhong, Mingzhi Sun*, Shengkai Sun

Research Institute of Highway Ministry of Transport，Beijing 100088，China

*Corresponding author's e-mail: mz.sun@rioh.cn

Abstract. With the development of society, the demand for reliable uninterruptible power sources is increasing. At the same time, with the improvement of people's life and environment protection, the developing of clean, environmental, reliable and inexpensive new energy sources has become a new research hotspot in the world. Highway infrastructure has good potential to develop renewable energy in addition to the transport function. Based on the energy loss caused by the transformation of kinetic energy into potential energy when the vehicle passes through the deceleration strip, a set of green mechanical power generation equipment is designed by introducing compressed air energy storage technology. The design scheme and working principle of the equipment are described and analyzed, and the prototype of the equipment is manufactured. The power generation efficiency of the equipment is tested by loading test, and the design and operation parameters of the equipment are optimized accordingly. The energy generated by 50000 loading tests is 0.123kw·h, which preliminarily realizes the development and utilization of potential road energy.

1. Introduction

With the change of climate and environment and the shortage of petroleum energy, the search for non-polluting and renewable green energy has attracted great attention. In the process of seeking new energy, as an important infrastructure, roads have the potential to develop renewable energy while undertaking transportation functions. In recent years, many kinds of advanced technologies have been used in road environment. At present, the research on road potential energy development mainly focuses on photovoltaic power generation pavement, piezoelectric power generation pavement and mechanical power generation equipment. Among them, many domestic units have done a lot of research on the theory, material and structure of photovoltaic pavement and piezoelectric pavement, and built a test road. But these two technologies need to redesign the pavement structure, develop new materials and construction methods. The technical requirements are complex, and the standards need to be redesigned to promote their application. From the application effect of the test road, the overall power generation efficiency of the piezoelectric pavement is very low due to the limitation of the quality of piezoelectric materials and pavement deformation. The specific application effect of the photovoltaic pavement needs to be tested, and the construction cost is high.

At present, according to the different design principles of road machinery power generation equipment, there are mainly hydraulic transmission, gear mechanical transmission, electromagnetic power generation, air bag liquid bag energy storage power generation and other forms. Professor Fang Guihua of Inner Mongolia University of Science and Technology proposed a road power generation device based on hydraulic transmission technology in order to effectively collect the energy generated by the impact of vehicles on the deceleration strip [1]. Mei Xiao of Shanghai Maritime University

Content from this work may be used under the terms of the Creative Commons Attribution 3.0 licence. Any further distribution of this work must maintain attribution to the author(s) and the title of the work, journal citation and DOI.
Published under licence by IOP Publishing Ltd

improved the power transmission part of the existing mechanical road power generation equipment and improved the power generation efficiency of the road power generation equipment [2]. Zeng Xiantao of Hunan Institute of Engineering proposed a method to collect the impact energy of downhill vehicles on the road surface based on the principle of magneto-electric conversion, combining the characteristics of driving safety protection measures of downhill road section [3]. Professor Kong Fanguo of Wuyi University developed an electromagnetic deceleration belt power generation equipment, and made theoretical modeling and analysis of the power generation mechanism. He estimated that the power generation capacity of single-lane power generation equipment module was 0.07kw • h [4]. Professor Tang of Donghua University has invented an energy recovery device that USES deceleration belts. By installing long air bags under the deceleration belts, the potential energy of vehicles can be converted into compressed air energy [5]. However, most of them remain in the stage of invention patents or theoretical research, and there are no corresponding shaped products on the market.

Through a large number of investigations, comparisons and theoretical calculations, this paper presents a research and development scheme of equipment using compressed air pumps for power generation. Compared with hydraulic and mechanical transmission, gas storage in gas tank can ensure the continuous and stable power generation process and provide higher energy conversion efficiency. In this paper, the design scheme and the working principle of the equipment are introduced, and a prototype of the equipment is manufactured. The power generation efficiency of the equipment is tested by loading test. Based on this, the design and operation parameters of the equipment are optimized, and the development and utilization of road potential energy is preliminarily realized.

2. Design scheme

The whole equipment is mainly composed of air compressor pump, gas storage tank, pneumatic motor, alternator, battery and other components buried in the road. According to the function, it can be divided into two parts: gas collection and energy storage module and exhaust power generation module.

The device collects compressed air by a number of mechanical air pumps, and separates the energy recovery process from the energy conversion process based on modular design method. It can efficiently recover the driving potential energy and kinetic energy. The independent energy conversion module can ensure the continuous and stable power generation process and further improve the energy conversion efficiency. The overall design of the equipment is shown in Figure 1, the design of the gas collection and recovery module is shown in Figure 2, the design of the energy conversion module is shown in Figure 3, and the design of the control system is shown in Figure 4.

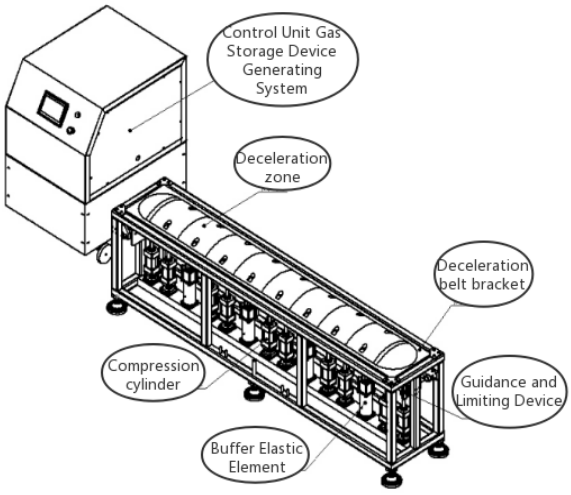

Figure1. Equipment system sketch

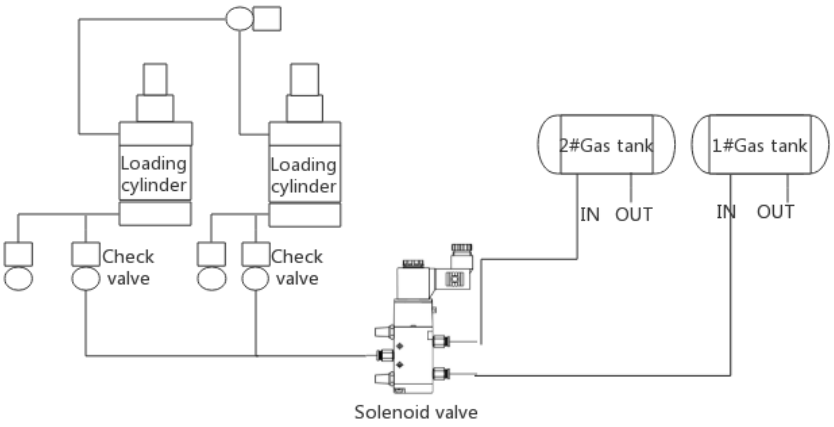

Figure2. Energy recovery module

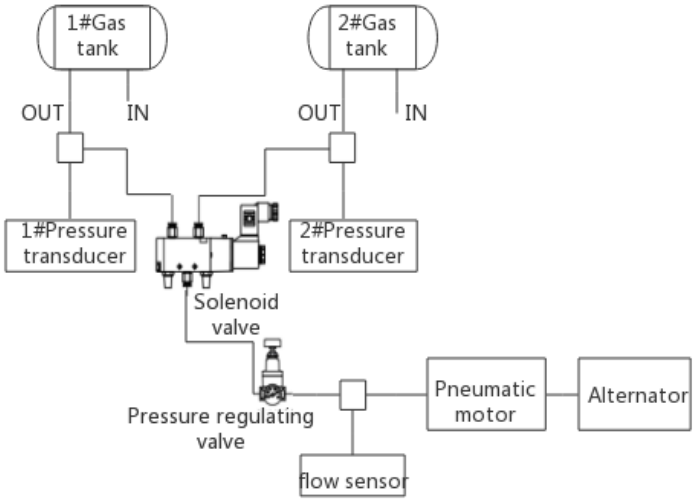

Figure3. Energy conversion module

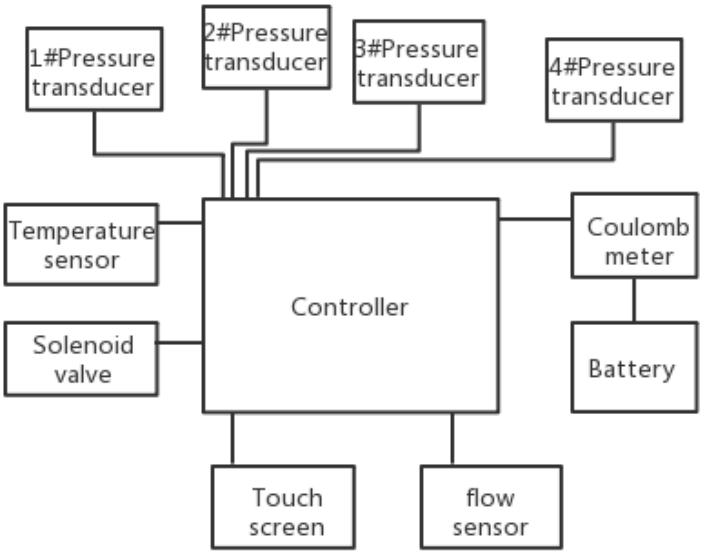

Figure4. Equipment control system

Specific parameters of the main components are as follows:

Determine the cylinder diameter and number of cylinder according to the relationship between axle load and working pressure of gas tank:

Total area:

$$S_{\text{total}} = \frac{F_{\text{vehicle}}}{P} = \frac{27\times10^{3}}{0.8\times10^{6}} = 0.03375(\text{m}^2)$$

Select 63mm diameter cylinder, single cylinder area:

$$S_{\text{cylinder}} = \frac{\pi D^2}{4}\times10^{-6} = 3.1\times10^{-3}(\text{m}^2)$$

Number of cylinders required:

$$\text{n} = \frac{S_{\text{total}}}{S_{\text{cylinder}}} = \frac{0.03375}{3.1\times10^{-3}} \approx 10.88$$

Therefore, there are 10 cylinders with 63mm inner diameter and 50mm stroke.

According to the collecting speed of the cylinder, the volume of the gas tank is determined. Two gas storage tanks with capacity of 150L and pressure withstanding pressure of 1.5MPa are set in this scheme.

According to the output power of pneumatic motor, a suitable type of generator is selected, with a power of 300 W.

3. Working principle of equipment and calculation of theoretical power generation

3.1 Working principle

Multiple groups of air pumps are placed in the pavement in the form of deceleration belts. Under axle load, compressed air enters the storage tank from the outlet of the air pump. The air pressure of the storage tank should be maintained in a fixed range. When the pressure reaches the upper threshold, the gas tank outputs high-pressure air to generate electricity. When the pressure reaches the lower threshold, the tank stops output and continues to collect gas. The power generation process is that the gas storage tank outputs high-pressure gas. The output pressure and flow are controlled by a solenoid valve to drive the pneumatic motor to run steadily. The pneumatic engine uses an appropriate output speed to drive the alternator to run and generate electricity with the appropriate mechanical output power.

3.2 Calculation of equipment power generation capacity

The air volume of 10 cylinders working once:

$$V_{\text{single time}} = L_{\text{cylinder}}S_{\text{total}} = 45\times10^{3}\times3.1\times10^{-3}\times10 = 0.001395(\text{m}^2)$$

The working range of pneumatic motor is 0.5-0.6 MPa.

Loading times required for a single channel filled with two gas tanks (from 0.5 MPa to 0.6 MPa):

$$F\text{requency} = \frac{2\times150\times10^{-3}}{0.001395} \approx 215(\text{times}\ )$$

Set loading frequency of loading system to 1000 times per hour.

The total loading times are 50000 times and the test time is 50 hours.

50000 loads, collecting gas: 50000*0.001395=69.75m^3.

Each time 300 L gas is discharged, the pneumatic motor can be driven to work for 1.07 min.

50000 loads to drivable pneumatic motor:

50000/300=166(times).

The pneumatic motor drives the generator and generates electricity everytime it works:

300w*1.07/60=0.00535(kw • h).

50000 loads, theoretical power generation value:

166*0.00535=0.8881(kw • h).

Roughly estimating the energy conversion efficiency of the equipment, the energy conversion rate of the general alternator can reach 90%, the energy conversion rate of the pneumatic motor can reach 30%, the conversion efficiency of the gas path is difficult to estimate, tentatively 50%, and the energy conversion rate of the whole equipment is 13.5%. Then the equipment can be loaded 50,000 times to achieve 0.12 degrees of power generation.

4. Test and optimization of equipment prototype

4.1 Prototype integrated assembly

According to the design scheme, a prototype of Road gas gathering and storage power generation equipment is manufactured. For the need of test and test, a loading system suitable for equipment loading test is developed. The design drawings of loading test system are shown in Figure 5 and the design drawings of equipment prototype are shown in Figure 6.

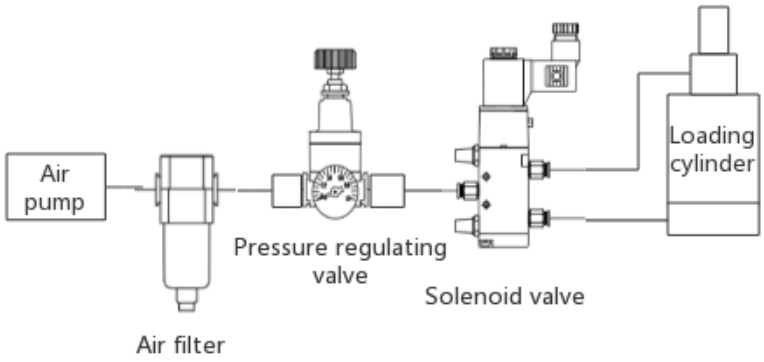

Figure5. Test Loading System



Figure6. Equipment prototype with loading test system

4.2 Equipment testing and optimization

The test load is 27 kN, simulating the weight of the rear axle of a single rear axle light truck, matching with 10 cylinders compressed to achieve the gas storage pressure, loading 50,000 times, the power generated by the test is 0.093 kw • h, and the energy conversion rate calculated according to the theoretical power generation is 10.5%. From this, it can be determined that the technical scheme is feasible and can achieve a certain energy conversion.

Next, the influence of the input pressure Penter of the pneumatic motor on the generation efficiency is studied. The parameter Penter affects the energy conversion efficiency of the pneumatic motor and the generator. The optimal value of the parameter is given through the test. The test conditions and results are shown in Table 1 below.

Table1. Measurement of Different Input Pressure P_{enter} of Pneumatic Motors

Working condition	Pneumatic motor input pressure /MPa	Start pressure of tank /MPa	Stop pressure of tank /MPa	Loading times	Average working time of single operation /s	Total generating capacity /kW·h
1	0.3	0.4	0.3	50000	74	0.103
2	0.4	0.5	0.4	50000	68	0.123
3	0.5	0.6	0.5	50000	56	0.093

Under the condition of constant gas collecting capacity, how to set the working pressure of pneumatic motor has an important influence on the power generation efficiency of the whole machine. When the working pressure is set high, the input pressure of 0.5 MPa corresponds to the best output torque of the pneumatic motor, which can drive the generator to the maximum power. When the working pressure is set low, the generator will lose a certain power, but when the gas collection capacity is constant, it can ensure that the power generation module works longer. Therefore, how to balance the relationship between the working time of the module and the generating power to maximize the generating capacity under the condition of constant gas collection, it is necessary to determine an optimal pneumatic motor input pressure P_{enter}. From the test data in Table 1, it can be seen that the pneumatic motor input pressure P of the prototype of the power generation equipment is set to 0.4 MPa, which can make the power generation efficiency of the whole equipment achieve the best.

5. Conclusion

A set of green mechanical power generation equipment was designed in this paper based on compressed air energy storage power generation technology. The design scheme and the working principle of the equipment were described and analysed, and a prototype of the equipment was manufactured. The whole set of equipment mainly consists of air pump, gas storage tank, pneumatic motor, generator, control system and other components. The power generation efficiency of the equipment is tested by loading test. Based on this, the design and operation parameters of the equipment are optimized, and the optimum input pressure Penter of the pneumatic motor is determined. Through testing, 50000 times of loading, the maximum power generation can be 0.123 kw • h, preliminary realization of energy conversion.

Acknowledgements

The research work described herein was funded by the Fundamental Research Funds for the Central Research Institute (Grant No. 2018-9013 & 2017-9059). This financial support is gratefully acknowledged.

References

[1] Fang Gui-hua, Liu Jin-feng, Wang Xing-chun. Design and preliminary study of a new type of pavement power generation device [J]. Hydraulic and pneumatic, 2011, 11 (3): 14-15.
[2] Mei Xiao, Wang Xin-yuan. Design and analysis of a new type of pavement power generation device [J]. Mechanical design and research. 2012, 28 (6): 56-59.
[3] Zeng Xian-tao. Inertial power generation system for driving downhill on expressway: China, 201210004239.8[P]. 2011-01-08.
[4] Kong Fan-guo, Wu Guan-lin. Theoretical research on electromagnetic road deceleration belt power generation device [J]. Mechanical design and manufacturing, 2014 (4): 76-78.
[5] Tang zhi, Chen wen et al. An energy recovery device using deceleration belt: China, 103470459A[P]. 2013-03-27.