IOP Conference Series: Earth and Environmental Science

PAPER • OPEN ACCESS

Simulation of Apple Picking Path Planning Based On Artificial Potential Field Method

To cite this article: JunLin Xie *et al* 2019 *IOP Conf. Ser.: Earth Environ. Sci.* **252** 052148

View the article online for updates and enhancements.

This content was downloaded from IP address 218.240.53.53 on 09/10/2019 at 21:55

Simulation of Apple Picking Path Planning Based On Artificial Potential Field Method

JunLin Xie*, ZhiYong Zhang[a], Ziyi Wei, and Saiwei Ma

College of Information Engineering, Northwest Agriculture and Forest University, YangLing, Shaanxi, 712100, China

*Corresponding author e-mail: no1jun0@nwafu.edu.cn, [a]zzy@nwsuaf.edu.cn

Abstract. This paper aims at the problem of picking path design for apple harvesting robot manipulator in dynamic and unstructured environmen, and according to the obstacle avoidance situation and non obstacle avoidance situation, the picking path design is achieved respectively. The non obstacle avoidance path is designed by the default path planning method and the artificial potential field method is used to avoid obstacles. By combining the characteristics of obstacles in the growth environment of fruit trees, the principle of two-dimensional potential application in artificial potential field is transferred to three-dimensional space, and a more smooth obstacle avoidance motion curve is obtained. The proposed picking path planning method is verified by Java graphical interface and MATLAB. The results show that picking path planning based on artificial potential field can effectively avoid obstacles and achieve timely and reliable picking.

1. Introduction

The research of apple picking robot adapts to the automation of agricultural production and the trend of mechanization. In order to improve the efficiency of apple picking robot, reasonable planning of the manipulator picking path has important practical significance for improving picking efficiency and reducing branch damage. Someone like LiangYang proposed a new algorithm based on fast exploratory sampling - exploratory random tree (RRT) to avoid obstacles and find the target position. Hu Xioping and others proposed an improved potential field model based on potential flow theory to plan the robot picking route; Li Biqing [1] and others put forward the method of using radio, plus the avoidance system with the advantage of remote control technology of the Internet of things and PLC real-time [2] control system to control the picking route of the robot, so that it can make accurate use of less time in the complex environment. The above analysis shows that apple picking robot works in a dynamic and unstructured environment, and its working objects have great differences and uncertainties. This makes the path planning of picking obstacles in 3D space and the image drawing of picking paths especially urgent, which will improve the picking efficiency and picking quality.

Because of the different apple species, the height of the crown is different, and the degree of fruit dispersal is also different [3]. Therefore, we must first determine the relevant parameters of apple fruit tree, including tree height parameters, in this apple picking path design. In order to have better practicability, this is to determine the appropriate 3D manipulator, and understand the degree of freedom of the manipulator, and the kinematic parameters of each degree of freedom. For example, the

Content from this work may be used under the terms of the Creative Commons Attribution 3.0 licence. Any further distribution of this work must maintain attribution to the author(s) and the title of the work, journal citation and DOI.
Published under licence by IOP Publishing Ltd

swing angle of the end effector of the manipulator [4]. And understand its kinematic equation and motion principle, so as to calculate the coordinates of the middle point of path planning. According to the understanding of the actual situation, the picking path planning can be divided into two situations: non obstacle avoidance and obstacle avoidance path design. The path planning of non obstacle avoidance means that the manipulator can move along the starting point and the target point, while the obstacle avoidance path planning needs to refer to the target point and obstacle point to find the appropriate picking path.

2. Artificial potential field method for path planning

The artificial potential field method was first proposed by Khatib [5]. Its basic idea is to move the motion of the robot in space into a motion of a particle in the artificial potential field. The target point will attract the robot, while the obstacle point will repulsion the robot, and the motion of the robot will be controlled by the resultant force of gravity and repulsion. Specific method: assuming that the robot is a particle, the motion space of the robot is a two-dimensional space. The coordinates of the robot in the two-dimensional workspace are (x, y), the coordinates of the target point are (x_g, y_g), and the gravitational potential field Uatt generated by the target point to the robot is U_{att}.

$$\vec{U}_{att}(X) = \frac{1}{2}k(X - X_{goal})^2 \tag{1}$$

In the equation K is the coefficient of gravity, x is the coordinate of the robot (x, y), xgoal is the coordinate of the target point, (x, y), and x-xgoal is the relative distance between the robot and the target point P_g

$$p_g = \| x - x_{goal} \| = \sqrt{(x - x_g)^2 + (y - y_g)^2}. \tag{2}$$

According to the negative gradient of gravitational potential field, gravity can be obtained.

$$\vec{F}_{att}(X) = -\Delta \vec{U}_{att}(X) = k\left(X - X_{goal}\right). \tag{3}$$

When there are n obstacles around the robot, the total resultant force of the robot is

$$\vec{F}_{goal} = \vec{F}_{att} + \sum_{i=}^{n} \vec{F}_{rep}. \tag{4}$$

The repulsive potential function of obstacles is defined as

$$U_o(W) = \begin{cases} \frac{1}{2}\beta\left(\frac{1}{\rho} - \frac{1}{\rho_0}\right)^2 & if \ \rho \le \rho_0 \\ 0 & if \ \rho > \rho_0 \end{cases} \tag{5}$$

The repulsive force gain coefficient is a controllable constant, which represents the distance of obstacles, and is the shortest distance between robot coordinate points and obstacle coordinate points [6]. The corresponding repulsive force is

$$F_o = -grad[U_o(W)] = \begin{cases} \beta(\frac{1}{\rho} - \frac{1}{\rho_0})\frac{1}{\rho^2}\frac{\partial \rho}{\partial W} & if\ \rho \le \rho_0 \\ 0 & if\ \rho > \rho_0 \end{cases} \tag{6}$$

Among them. Resultant force F=Fa+Fo determines the direction of motion of the robot.

3. Path design without obstacle avoidance

In order to facilitate the study, the following assumptions are made for picking up the arm body [7]. The arm is rigid, and the input of the control object is the output torque of the joint motor. The influence of friction and friction is not considered. The shoulder joint and the upper arm, the elbow and the forearm are abstracted into homogeneous rods. The dummy picking arm model [8] is shown in Figure 1. At the same time, we also assume that the obstacle is assumed to be spherical. The sphere can be expressed as Z (Po), where Po (x, y, z) is the center of the sphere in the coordinate system, and R is the radius. Although the modeling method inevitably expanded the obstacle area, the description of the obstacle domain became simpler and the approximate calculation method of the spherical envelope was calculated. So as to improve the efficiency of path planning and design, and also ensure the safety of the path [9].

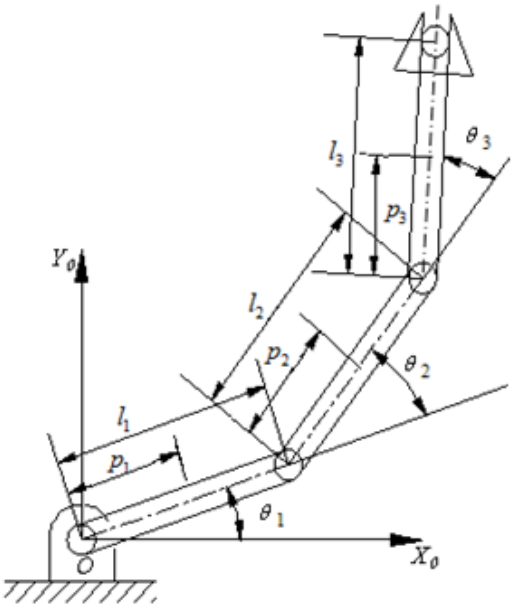

Fig 1. The model of apple picking arm robot

4. Path design without obstacle avoidance

Under the condition of no obstacle avoidance [10], we use the preset path method and take the two-dimensional space plane as the foundation. Three degree of freedom picking hands were used to simulate the picking process of randomly generated apples. So suppose the picking robot in the simulation does not move [11]. All generated random Apple coordinates are available for picking hands. In this design, the track path algorithm is first used to get the location of the current picking hand and the location of the target. First, the location of the picking hand is connected to the target point, and several points of equal distance W1, W2, W3 and so on are selected [12]. Secondly, through the adjustment of the manipulator, the position of picking hands reaches W1 in turn. Finally, the position of picking hands is gradually adjusted to the planning point until the target point through the

manipulator. According to the design of picking arm, the algorithm can make minor adjustments in the number of locus points.

5. Obstacle avoidance path design

In order to avoid damage to apples in picking process, it is particularly important to choose a more stable and efficient path planning method. Obstacle avoidance picking path is the key part of picking path planning, which is the core of efficiency improvement. Based on the assumption of the location of picking hands, the artificial potential field method has the advantage of path planning in local and static conditions. Based on the 2-D plane obstacle avoidance algorithm, the artificial potential energy method, it is migrated to the 3D space of apple picking robot and designed obstacle avoidance path [13]. The basic hypothesis of picking path research is that the picking robot does not move, that is, fixed-point. The distribution of apple fruit has a definite range in three dimensions. The target area used in the path planning process should be consistent with the apple distribution range. In order to improve the efficiency of picking path planning, the parameters of apple tree can be determined, and the existence [14] range of the target point can be obtained by this parameter. The algorithm of target points and obstacle points can be established by establishing the D-H coordinate kinematics equation of the picking arm model. By introducing the kinematic parameters of the model to the kinematic equation, the kinematics positive solution is deduced according to the joint angles, and the spatial range of the picking hand can be determined.

6. Simulation and validation

6.1. Obstacle avoidance path simulation

Shown as Table 1, according to the starting point, target point and randomly generated obstacle point parameters, the obstacle avoidance path design algorithm is adopted to get the picking hand movement roadmap successfully avoiding obstacles [15].

Table 1. Coordinates of target point obstacle points

name	X(m)	Y(m)	Z(m)
target	0.62	2	2.5
obstacle1	0.5	1.5	2.1
Obstacle2	0.43	1.4	2.2

The current step size is 0.05m, and the total number of path points is 64. The design path obtained from different angles is displayed in three-dimensional space coordinates by using the visual angle conversion tool of MATLAB. The graph can be rotated 90 degrees counter-clockwise as shown in Fig. 2 and 40 degrees clockwise as shown in Fig. 3

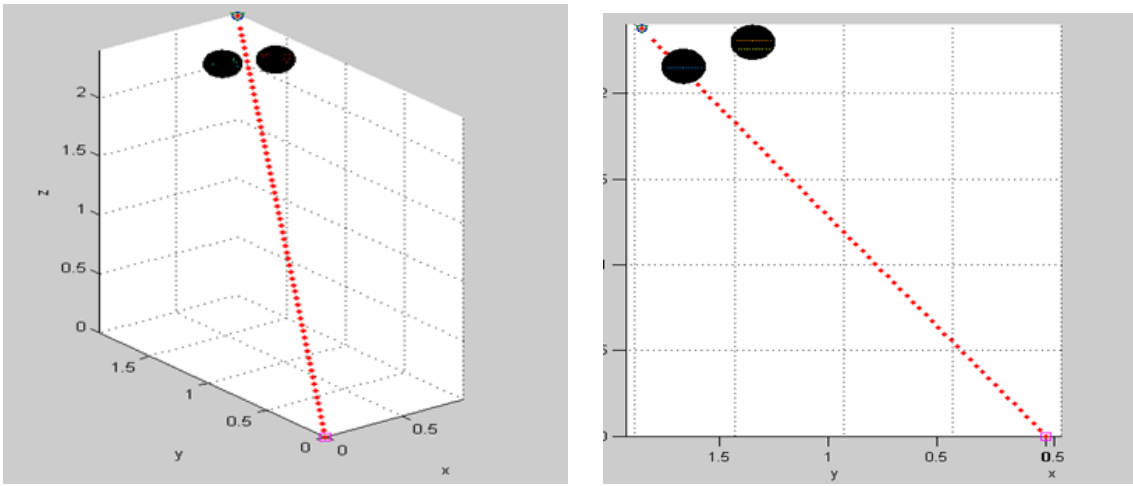

Fig 2. Obstacle avoidance planning with 90 degrees of rotation

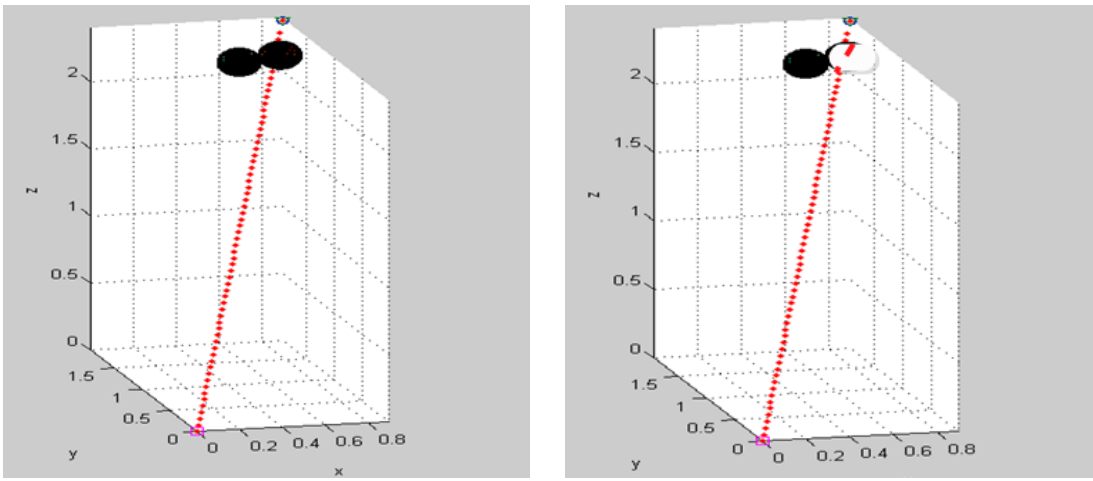

Fig 3. Rotation 40 degree obstacle avoidance picking plan

According to the algorithm used in this paper, the success of picking path design depends on not only the coordinate position of the target point and obstacle point. At the same time, step size is also a key parameter [16].

A set of simulation data is used to test the selection of step size. The conclusion is drawn by testing that choosing appropriate small step size can increase the chance of success. According to the results in Table 2, it is not clear that the smaller the step size, the closer the actual end point is to the target end point, so the appropriate step size should be chosen. Based on this model, the step size is 0.05.

Table 2. Path planning results of fixed point asynchronous synchronization

number	Step size (m)	Target point	Final point	Track point count
1	0.01	(1.2, 2, 1)	(1.21,0.98,1)	200
2	0.05	(1.2, 2, 1)	(1.21,0.98,1)	128
3	0.1	(1.2, 2, 1)	(1.21,0.98,1)	64
4	0.2	(1.2, 2, 1)	(1.2, 2, 1)	32

7. Simulation of non-obstacle avoidance path results

The picking target Apple shown in Figure 4 is located on the right side of the picking hand, and the picking hand is located at the starting point of the path planning. The swing arm code is invoked circularly to show the swing arm approaching the planned point continuously on the graphical interface, and the swing arm is inhaled to realize the picking.

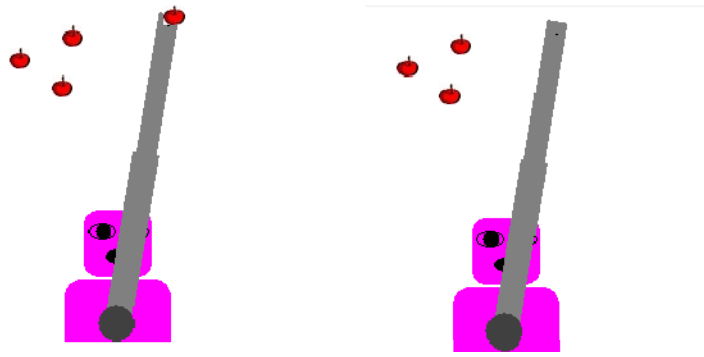

Fig. 4 Sketch map of picking simulation

8. Conclusion

Based on the artificial potential field method, this paper designs and implements two different algorithms for apple picking path by analyzing the actual picking environment and considering the actual situation of obstacle avoidance and non-obstacle avoidance. The simulated images are analyzed and compared, and the picking action using MATLAB graphical interface is realized. Draw, randomly generate Apple position points, automatic real-time random picking of apples, complete the simulation of picking hand path planning. Although there is a certain local optimum based on the artificial potential field method, there may be a local minimum, i.e. the gravitation and repulsion of the picking hand at the point are cancelled each other, the picking hand will not move toward the target point and affect the intuitive judgment of the picking accuracy. From the simulation results, the algorithm is still one for improving the picking efficiency. An optimal picking planning strategy.

Acknowledgements

This paper was financially supported by the key research and development project of Shaanxi province(2018ZDCXL–NY–02–03),and the Fund of Teaching Reform Project of Northwest Agriculture and Forestry University in 2017 (No.JY1703084).

References

[1] Structure design and working ability of fruit picking manipulator [J]. Chen Yanyan, Shendong. Agricultural mechanization. 2017 (10)
[2] Robot obstacle avoidance and path planning based on improved artificial potential field method [J].Xufei.Computer science.2016 (12)
[3] Robot Path Planning by Artificial Potential Field Method of Multistage Fuzzy Systems [J]. Luluqiu, Shiwuxi. Scientific and Technological Innovation and Application. 2016 (02)
[4] A new method of robot dynamic path planning based on artificial potential field [J].Zhai Hongsheng, Wang Jiaxin, Journal of Chongqing University of Posts and Telecommunications (Natural Science Edition). 2015 (06)
[5] Research on path planning simulation of multiple mobile robots [J]. High Strength, Song Yu, Lu Dongqi, Chen Shasha. Computer simulation. 2014 (07)
[6] Path planning of mobile robot based on improved artificial potential field method [J]. Journal of Shandong University of Science and Technology (Natural Science Edition). 2014 (01)
[7] Path Planning of Soccer Robot Based on Neuro-Fuzzy Potential Field Method [J]. Lin Zhixiong,

Zhang Li. Computer Simulation. 2014 (01)
[8] Robot Path Planning for Improved APF in Complex Environments [J]. Lunchao, Zhang Wanxu. Computer Engineering and Applications. 2013 (24)
[9] Design of Embedded Packaging and Handling Robot Control System Based on ARM [J]. Sun Yong, Wei Xin. Packaging Engineering. 2017 (23)
[10] Research on a New Force-sensing Flexible Fruit and Vegetable Harvesting Manipulator [J]. Xiao Yingkui, Li Yongqiang, Xie Long, Fu Yingda. Agricultural Mechanization Research. 2017 (10)
[11] Research on control system of 6-DOF industrial robot based on binocular vision [J].Liu Baochao.Industrial instrument and automation device.2017(04)
[12] Design of motion planning and control system for cucumber harvesting manipulator [J].Journal of Wang Yan Luoyang Institute of Technology (Natural Science Edition). 2017 (02)
[13] Design of multi-finger and multi-joint picking manipulator based on FPA control system [J]. Shenyige, Yuan Zhu. Agricultural mechanization research. 2017 (05)
[14] A Path Planning Method Based on Artificial Potential Field Improved by Potential Flow Theory. Xiao-ping HU, a*, Ze-yu LI and Jing CAO . 2017(02)
[15] GART: An environment-guided path planner for robots in crowded environments under kinodynamic constraints. Liang Yang1, Jizhong Xiao1 , Juntong Qi2 , Liying Yang3 , Lei Wang4 , and Jianda Han.2016 (01)
[16] Task and Motion Planning for Apple Harvesting Robot. Tien Thanh Nguyen, Erdal Kayacan, Josse De Baedemaeker Wouter Saeys.2013 (02)