IOP Conference Series: Materials Science and Engineering

PAPER • **OPEN ACCESS**

Development of a backup drive in locomobile construction

To cite this article: A A Shubin *et al* 2019 *IOP Conf. Ser.: Mater. Sci. Eng.* **560** 012169

View the article online for updates and enhancements.

This content was downloaded from IP address 218.77.120.31 on 06/11/2019 at 07:51

Development of a backup drive in locomobile construction

A A Shubin, P V Vitchuk and A E Smolovik

Kaluga Branch of the Moscow State Technical University named after N.E. Bauman, 5, Bazenov st., Kaluga, 248000, Russia

E-mail: zzzVentor@ya.ru

Abstract. Current maintenance and repair of the railway track is a prerequisite for the efficient operation of rail transport. The main task of the current maintenance of the way is to create conditions for ensuring the uninterrupted movement of trains with set speeds and long service life of all elements of the way. In recent years, locomobiles are coming into use. These are hybrid road-rail cars that are able to move both on the railway track and on highways. Locomobiles are made based on the car by installing the mechanisms of extension of the railway chassis on the frame of the car. Trains are constantly moving along the railway tracks, so repairs and maintenance of the track should not disrupt their schedule if it is possible. In case of an unworkable condition of the vehicle located on the railway track, there will be an emergency which requires towing transport and, accordingly, time costs, which accompanies large economic losses. In connection with the above, the task of creating a backup drive in the locomobile is urgent. The article presents the design of a backup drive for the locomobile and describes the principle of its operation. The dependencies for calculating the limiting operating time of the drive and the distance traveled by the vehicle are given, depending on the speed of its movement and the capacity of the battery. The graphs for determining the optimal speed of the locomobile are obtained.

1. Introduction

Current maintenance and repair of the railway track is a prerequisite for the efficient operation of rail transport. The main task of the current maintenance of the way is to create conditions for ensuring the uninterrupted movement of trains with set speeds and long service life of all elements of the way. Maintenance and repair works are carried out the year-round and on the entire railway network [1].

All works are subdivided into planned-preventive and non-deferred ones. They are performed by teams of workers according to the calendar schedules which are based on the data of thorough inspections of the technical condition of the track and structures, considering local conditions and seasonal features. Troubleshooting should be done in a timely manner, until breakdowns do not pose a threat to the safe movement of trains and do not require too much effort to eliminate [2–4].

At the time of the execution of the works, including the delivery teams, there is the “window” in the schedule of trains. In cases of significant distances between stations, which is typical for the regions of Siberia and the Far East, a significant part of the time allocated for repair work falls on the transportation of crews.

For the delivery of crews and the equipment to the place of repair, railcars are used. These are motor self-propelled railway cars [5].

In recent years, in addition to railcars, locomobiles are coming into use. These are hybrid road-rail cars that are able to move both on the railway track and on highways. Their main advantage over railcars

Content from this work may be used under the terms of the Creative Commons Attribution 3.0 licence. Any further distribution of this work must maintain attribution to the author(s) and the title of the work, journal citation and DOI.
Published under licence by IOP Publishing Ltd

is the ability to send teams not only from the station, but also from any railway crossing, which can significantly reduce the teams transportation time. Locomobiles are made based on the car by installing the mechanisms of extension of the railway chassis on the frame of the car.

The principle of installing the locomobile on the railway chassis is as follows (figure 1): when driving on the road, the locomobile 1 drives up to the rail track. Then, it stands directly on the rail heads, for example, at a crossing. Further, the rail chassis 2 and 3 begin to descend and rest against the rolling surface of the rails. When reaching the lower point of the suspension stroke, the drive of the lowering of the chassis is turned off, and the locomobile can continue to move along the rails on the automobile stoke.

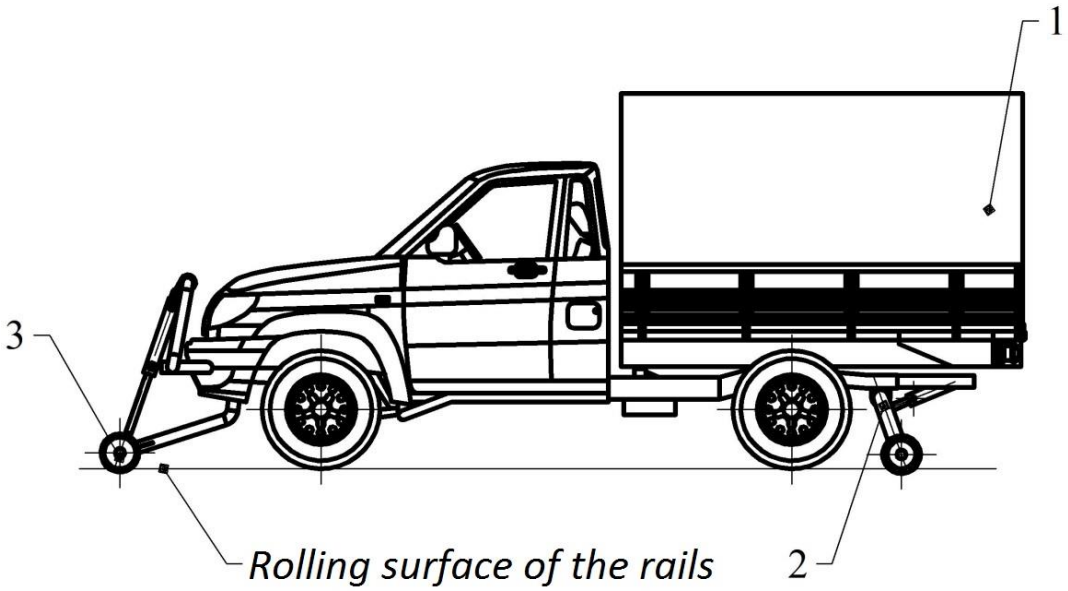

Figure 1. A locomobile: 1 – car; 2, 3 – rear and front railway chassis.

The drive of the extension of the railway chassis can be different, but the most common is hydraulic one, since under all equal conditions it is cheaper than the electric drive and is able to develop greater efforts at relatively small sizes. Although, that is not without some drawbacks: the hydraulic actuator requires retrofitting the vehicle with a hydroelectric power station and related equipment, as well as additional maintenance during operation.

All the locomobiles produced by the company “TVEMA” have the hydraulic actuator of the extension mechanism chassis [6].

Trains are constantly moving along the railway tracks, so repairs and maintenance of the track should not disrupt their schedule if it is possible. In case of an unworkable condition of the vehicle located on the railway track, there will be an emergency which requires towing transport and, accordingly, time costs, which accompanies large economic losses. Among other issues, the locomobile has a specific design in relation to rail transport, so the design of towing transport should provide a special coupling for the locomobile.

In connection with the above, the task of creating a backup drive in the locomobile is urgent. The implementation of this task is possible thanks to the design features of the vehicle, namely the presence of the railway chassis in which the motor mechanisms can be located. It is most advisable to use hydraulic motors as a motor mechanism, since there is a hydroelectric power station in the locomobile which is capable of operating from a DC source, i.e. the car battery.

2. Development of a backup drive

When developing a backup drive, the following must be considered. The backup drive must not interfere with the operation of the main drive of the vehicle and must not have permanent rigid kinematic

connection with the railway wheel, as this will lead to resistance to the wheel rotation. As a result, the wheel can slide on the surface of the rail wheel and wear out quickly.

Considering the design features of the railway part of the vehicle, hydraulic motors should be placed in the rear suspension. Figure 2 shows the design of the rear suspension with a backup drive. It consists of: hydraulic motor 1, drive shaft 2, electromagnetic clutch, drive wheel 10, and metal rear suspension 14. The use of the electromagnetic clutch is determined by the simplicity and speed of inclusion, as well as low power consumption.

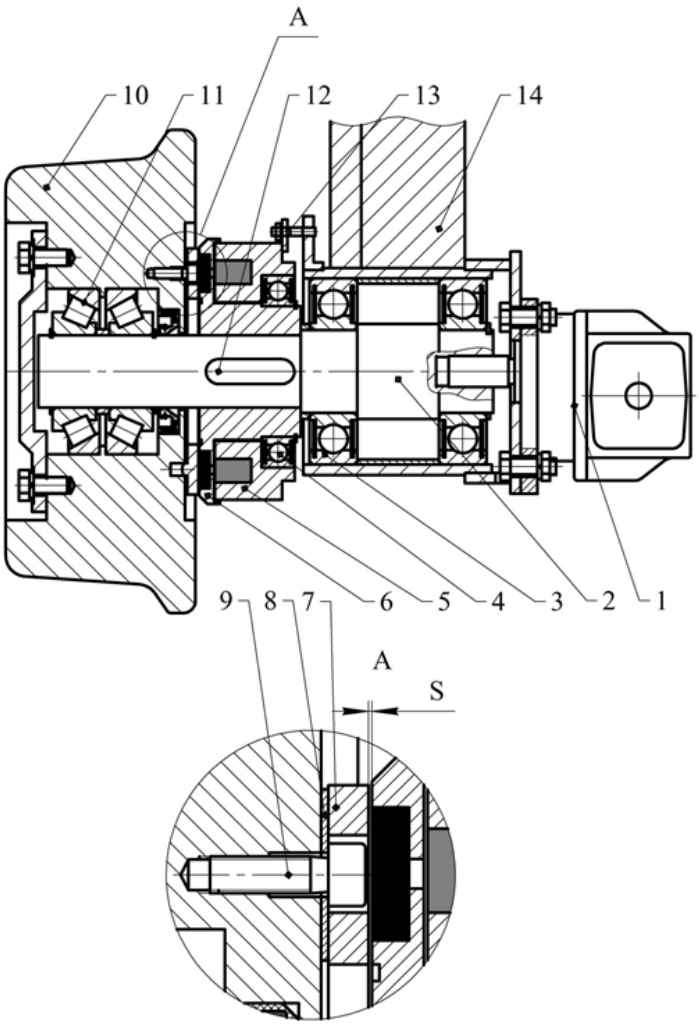

Figure 2. A locomobile backup drive: 1 – hydraulic motor; 2 – drive shaft; 3, 4, 11 – bearings; 5 – electromagnetic clutch coil; 6 – rotor; 7 – anchor; 8 – flat spring; 9, 13 – bolts; 10 – drive wheel; 12 – key; 14 – chassis.

The principle of its operation is as follows. In normal mode, when the locomotive is moving by the drive of the car, the drive shaft 2 works as an axis. The electromagnetic clutch coil 5 is not energized, so the anchor 7 is not attracted to the rotor 6. The magnetic gap S is forming between them. There is no kinematic connection between the drive wheel 10 and the engine 1, so it rotates freely in the bearings 11.

In case of failure of the main drive of the car, the backup drive turns on. The voltage is applied to the electromagnetic clutch coil 5. The anchor 7 is attracted to the rotor 6, and the kinematic connection of the hydraulic motor 1 and the drive 7 is forming. Next, the hydraulic motor 1 turns on, and the torque is transmitted from it to the shaft 2 mounted in the bearings 3. They, in turn, are installed in the metal structure of the railway chassis 14. From the shaft 2, the torque is transmitted to the rotor 6 by means of the keyway connection 12. The rotor 6 and the anchor 7 have a friction connection due to electromagnetic force, so the torque is transmitted to the anchor. The anchor is rigidly connected to the

drive wheel by means of the bolts 9, so the torque is transmitted from it to the running wheel. In the electromagnetic clutch, the gap S is provided by the flat spring 8. The coil 5 of the electromagnetic clutch is mounted on the bearing 4 and connected to the body of the metal structure 9 by means of the bolt connection 13.

In the above design, the electromagnetic clutch FM 150 [7] with an operating voltage of 24V is used. Since the voltage of the onboard network of most domestic cars is 12V, it is necessary to use a device for voltage matching. For that purpose, using a pulse voltage Converter NPP Orion PN-40 is proposed.

3. Determination of the optimal speed

As noted above, the backup drive motor is powered by a backup hydroelectric power station located in the locomotive housing. The car battery is a source of hydroelectric power. The battery is not designed for such loads, so the time of use of a backup drive will be limited. The rate of the battery discharge is directly proportional to the speed of the car. Therefore, it is needed to choose the speed of the car at which it will be able to get to a crossing or a station in the shortest time possible, and the battery should not be completely discharged by the time of the arriving.

To determine the optimal speed of the vehicle depending on the battery discharge, a program was developed in the LabView environment. The block diagram of it is shown in figure 3.

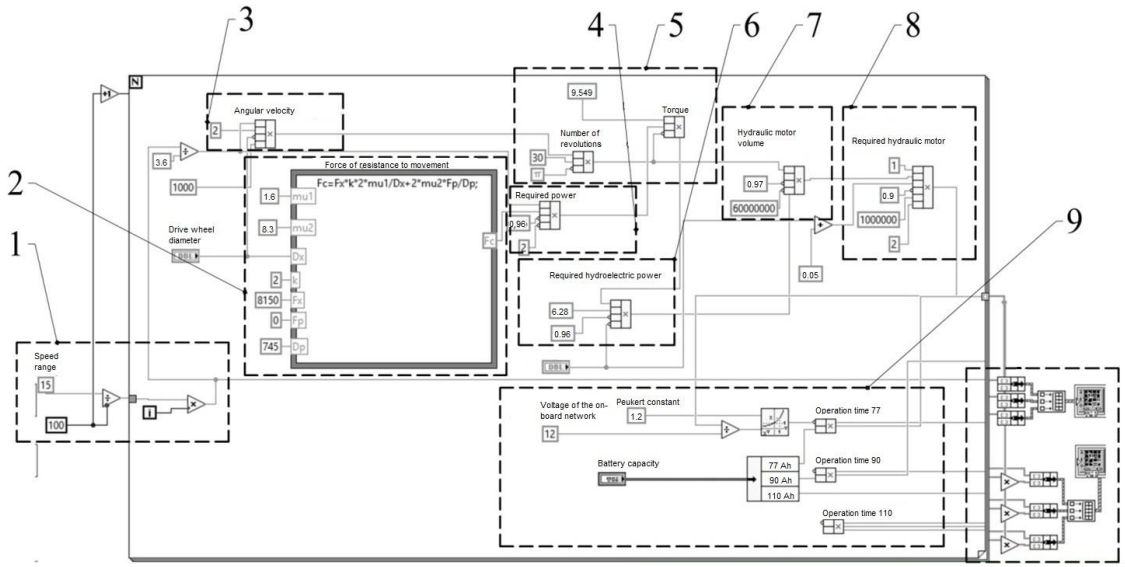

Figure 3. Block diagram: 1–9 – Executive modules (the details on each module are described in the main text)

The formulas for the manual calculation of power of a hydroelectric power station and the operation time of the battery were laid in the basis of the block diagram. Conventionally, the block diagram consists of ten modules.

In module 1, the range of the vehicle speeds is set, and the plotting step is calculated.

In module 2, the force of resistance to movement is calculated [8]:

$$F_c = \frac{2\mu + fd}{D} \cdot Fk_1$$

where $\mu = 1.6\,\text{mm}$ – the coefficient of the rolling friction of the steel wheel on steel (friction force shoulder); $f = 0.011...0.015$ – the coefficient of the sliding friction for bearings; $k_1 = 2...2.2$ – the coefficient of the resistance of the flange; $d = 50$ mm – the diameter of the bearing axle; $D = 250\,\text{mm}$ – the diameter of the running wheel; $F = 8150$ N – the load on the running wheel.

When using the backup drive, it is necessary to make a complete lifting of the locomotive to eliminate

the resistance force to movement caused by pneumatic wheels. This will reduce the battery discharge rate.

The angular velocity is calculated in module 3:

$$\omega = \frac{2v}{D}$$

where v is the current speed, m/s.

In module 4, the required power is calculated, considering the resistance force to the movement of the running wheel defined in module 2:

$$P = k_2 \cdot \frac{F_c \cdot v}{\eta}$$

where $\eta = 0.9$ – the efficiency of the movement mechanism; $k_2 = 1.1...1.2$ – the power reserve factor.

In module 5, the torque on the shaft of the hydraulic motor T and the number of revolutions of the hydraulic motor shaft n are calculated:

$$T = \frac{9.549P}{n} \quad (1)$$

$$n = \frac{30\omega}{\pi}$$

where $\eta = 0.9$ – the efficiency of the movement mechanism; $k_2 = 1.1...1.2$ – the power reserve factor.

The calculation of the minimum required volume of the hydraulic motor according to the torque value (1) is made in the module 6 [9]:

$$q = \frac{2\pi T}{p\eta_{m1}}$$

where $p \approx 14$ MPa – the pressure drop on the hydraulic motor (selected tentatively); $\eta_{m1} = 0.95...0.96$ – the mechanical efficiency of the hydraulic motor.

The calculation of the required flow rate of the hydraulic motor is determined in module 7 by the values of the hydraulic motor volume and number of the revolutions of the hydraulic motor shaft [10]:

$$Q = \frac{qn}{60 \cdot 10^6 \eta_{m2}}$$

where $\eta_{m2} = 0.95...0.97$ – the volumetric efficiency of the hydraulic motor.

The calculation of the minimum required hydroelectric power P_{req} is performed in module 8:

$$P_{req} = pQ$$

In module 9, the calculations of the power station strength armature current I, the operation time of the battery t, and the distance travelled during this time l are performed, respectively:

$$I = \frac{P_{req}}{U}$$

$$t = \frac{C}{I^k}$$

$$l = vt$$

where $U = 12$ V – the voltage of the on-board network; C – the battery capacity, Ah; $k = 1.1...1.3$ – the Peukert constant for lead-acid batteries [10].

According to the results of the calculations, the graphs are plotted in module 10. They are shown in figure 4.

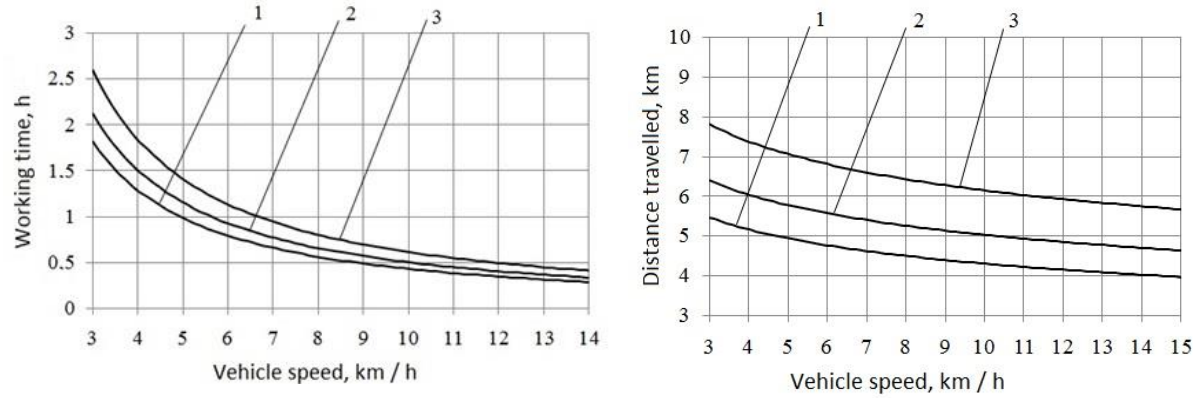

a b

Figure 4. Graphs of the dependency of the battery life (4a) and the distance traveled (4b) from the speed of the vehicle for the different capacity battery pack: 1 – 77 Ah; 2 – 90 Ah; 3 – 110 Ah.

The choice of the required speed of the car, corresponding to a certain capacity of the battery, is based on the obtained dependencies.

4. Conclusion

The implementation of the backup drive in the locomobile design will allow to reduce the probability of emerging of unplanned idle times of railway transport.

The program developed based on the block diagram (figure 4) can be installed on a mobile device. This will allow to issue a control signal to regulate the speed of the movement depending on the value of the battery state and the required distance, thereby ensuring the automation of the control of the backup drive.

References

[1] Suhih R D 2002 *Travel Arrangements and Tools* (Moscow: UMK MPS Publishing) p 428
[2] Egorov A S 2006 *Mechanization of Track Works* (Moscow: Route Publishing) p 90
[3] Solomonov S A, Popovich M V and Bugaenko V M 2000 *Track Machines* (Moscow: UMTS ZHDT Publishing) p 756
[4] Shubin A A, Vitchuk P V and Smolovik A E 2015 *World of Transport* [in Russian – Mir transporta] **6(61)** 78–87
[5] Popovich M V and Bugaenko V M 2009 *Track Machines* (Moscow: UMTS ZHDT Publishing) p 820
[6] Official site of the company “TVEMA,” available at: https://tvema.ru/
[7] Electromagnetic and pneumatic clutches and brakes of Telcomec, available at: http://www.servomh.ru/images/katalogi/electromagnitnie-mufti.pdf
[8] Aleksandrov M P, Ivashkov I I and Kazak S A 1993 *Calculations of Crane Mechanisms and Their Parts* (Moscow: VNIIPTMASH Publishing) p 187
[9] Gojdo M E 2009 *Design Volumetric Hydrodrives* (Moscow: Engineering Publishing) p 304

[10] Battery Information site AkbInfo.ru, available at: http://akbinfo.ru/ustrojstvo/jomkost-avtomobilnogo-akkumuljatora.html