PAPER • **OPEN ACCESS**

Alternative of LNG cold exergy utilization for generating electrical energy at Gresik LNG receiving terminal

To cite this article: S B A Putra and M Sudibandriyo 2019 *IOP Conf. Ser.: Mater. Sci. Eng.* **543** 012044

View the article online for updates and enhancements.



IOP ebooks™

Bringing you innovative digital publishing with leading voices to create your essential collection of books in STEM research.

Start exploring the collection - download the first chapter of every title for free.

This content was downloaded from IP address 58.16.7.37 on 18/09/2019 at 03:03

Alternative of LNG cold exergy utilization for generating electrical energy at Gresik LNG receiving terminal

S B A Putra and M Sudibandriyo
Chemical Engineering Department, Faculty of Engineering, Universitas Indonesia, Depok, 16424, Indonesia

E-mail : msudib@che.ui.ac.id

Abstract. Gresik LNG receiving terminal will be built to meet the needs of combined-cycle power plant (PLTGU) with natural gas regasification rate of 60.95 MMSCFD. In conventional regasification process using open rack vaporizer (ORV), the potential of LNG cold exergy will be wasted to seawater which is used as a heat source from the environment. The commercially proven scheme of the regasification process with the utilization of LNG cold exergy to generate electrical energy such as Direct Expansion, Rankine Cycle and combined Direct Expansion+Rankine Cycle is simulated with Unisim computer software. The purpose of this study is to assess technically and economically three scheme mention above. The results show that the combined scheme has the ability to produce the largest electricity surplus of 39.80 kWh per ton LNG regasified with potential revenue from electrical energy sales of USD 1,140,935 per year. The energy and exergy analysis shows that this scheme also has highest thermal efficiency of 14.48% and highest exergy efficiency of 60.71%. However, based on the results of economic analysis found that Direct Expansion scheme has the highest NPV among the three schemes with a value of USD 695,032.

1. Introduction

The Government of Indonesia through RUPTL 2017-2026 seeks to reduce the use of coal and oil fuel by increasing the utilization of natural gas up to 26.7% by 2026 in the national electricity energy mix. Based on these projected needs, PT X plans to build an LNG receiving terminal to supply a power plants in Gresik. Total LNG to be regasified at terminal is 54.23 ton/h equivalent to 60.95 MMSCFD of natural gas. The terminal is designed with Open Rack Vaporizer using seawater as a heat source.

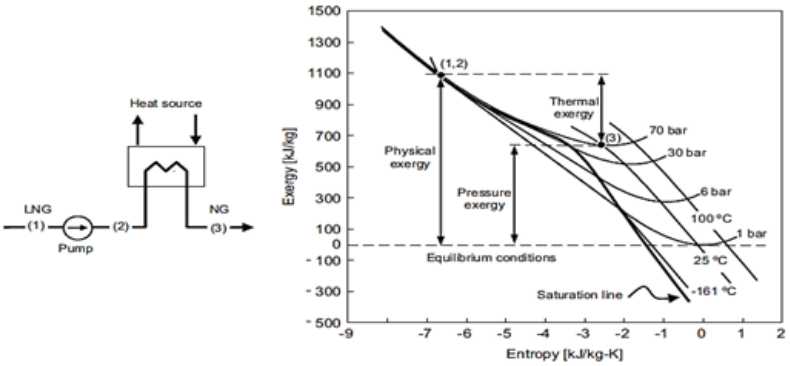

Figure 1. Change of exergy during LNG evaporation process [3]

Content from this work may be used under the terms of the Creative Commons Attribution 3.0 licence. Any further distribution of this work must maintain attribution to the author(s) and the title of the work, journal citation and DOI.
Published under licence by IOP Publishing Ltd

This research focuses on the utilization of LNG physical exergy in the evaporation process as shown in Figure 1, where physical exergy consists of two components namely thermal and pressure exergy caused by the difference between LNG temperature and pressure to environment reference.
In the conventional LNG evaporation process, which mostly utilizes heat from the environment, the working fluid lost its cold temperature potential when its temperature reaches the value of the environment. If the pressure are also equal, the energy potential of pressurized gas is also lost [1]. To be able to exploit the potential of cold exergy in LNG there are several concepts that can be used, one of which is used for the generation of electrical energy. Research on this concept has been widely practiced, but only 3 power generation technologies applied commercially namely Direct Expansion (DE), Rankine Cycle (RC) and a combination of Direct Expansion+Rankine Cycle (DE+RC) [3].

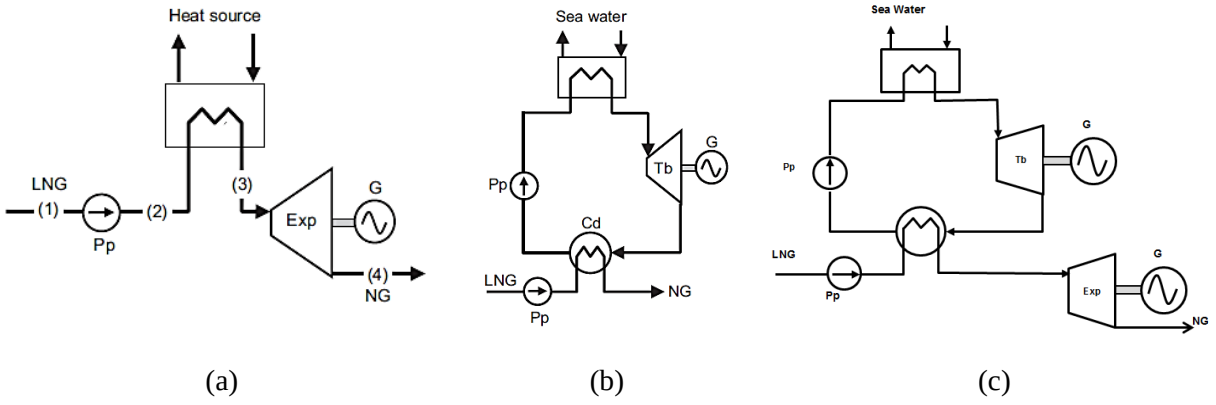

(a) (b) (c)

Figure 2. DE (a), RC (b) and DE+RC scheme (c) [3]

Many researchers have conducted research on modelling cold energy utilization [5] [6] [7] [8]. Research carried out by modifying the scheme, operating conditions, heat source or working fluid. A study of the economic study of cold energy utilization of LNG in South Korea has also been carried out [4]. This paper contains a technical and economic assessment of the application of LNG evaporation technology with the utilization of LNG cold exergy to generate electrical energy through Direct Expansion, Rankine Cycle and a combination scheme of Direct Expansion+Rankine Cycle at Gresik LNG receiving terminal, East Java. The working condition in Gresik is unique due to it has tropical climate condition and high send out gas pressure because it's dedicated only to supply the gas power plant, not like usual LNG receiving terminal who serve city gas with low send out gas pressure.
Energy analysis is based on the first law of thermodynamics. Energy efficiency or thermal efficiency is calculated by comparing the net work the system generates with the received heat input [5].

$$\eta_{\mathrm{th}} = \frac{\mathrm{W_{net}}}{\mathrm{Q_{in}}} \times 100\% \quad (1)$$

Where: η_{th} = Thermal efficiency of the system (%)
W_{net} = Net power production of the system (kW)
Q_{in} = Heat input rate to the system (kW)

The analysis of exergy is based on the second law of thermodynamics. The exergy efficiency is defined as exergy output divided by exergy input to the system [7] as Equation 2. The exergy input is taken as the exergy change of the heat source. The exergy output is the exergy of the net work and exergy of natural gas.

$$\eta_{ex} = \frac{W_{net} + E_{\ NG_OUT}}{E_{\ LNG_IN} + E_{SW}} \quad (2)$$

Where: η_{ex} = Exergy efficiency of the system (%)
W_{net} = Net power production of the system (kW)
E = Exergy on stream flow (kJ)

The economic calculations for the application of the three schemes at Gresik terminal include Fixed Capital, Operating Expenditure, Revenue and Net Present Value/NPV. Fixed Capital calculated based on purchased equipment cost data that is updated using the CEPCI cost index. The purchased cost data is multiplied by the installation factor to obtain fixed capital cost as shown in Table 1. The Operating Expenditure is assumed to be 4% of Fixed Capital and escalated by 5% per year. Revenue is calculated by multiplying the net power with electricity selling price in East Java of USD 0.0586 / kWh.

Table 1. Typical factors for estimate fixed capital cost [2]

Item	Fluids
Major equipment, total purchase cost	C_e
f_{er} Equipment erection	0.3
f_p Piping	0.8
f_i Instrumentation and control	0.3
f_{el} Electrical	0.2
f_c Civil	0.3
f_s Structures and buildings	0.2
f_l Lagging and paint	0.1
ISBL cost C = Σ C_e x	3.3
Offsites (OS)	0.3
Design and Engineering (D&E)	0.3
Contingency (X)	0.1
Total fixed capital cost C_{FC} = $C(1+OS)(1+DE+X)$	
= $C\,x$	1.82
= $\Sigma\, C_e\, x$	6.00

2. Methods

System boundary of LNG cold exergy utilization to generate electrical energy at Gresik LNG receiving terminal is limited only on vaporization stage of LNG into natural gas according to Figure 3.

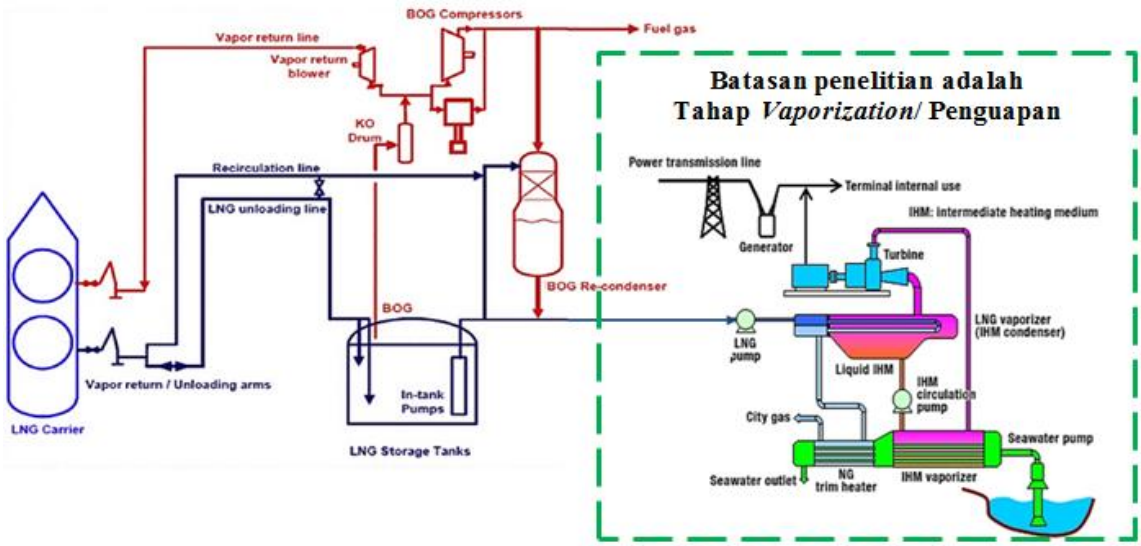

Figure 3. System boundary in research

The research methodology used in the techno-economic assessment on the alternative scheme of LNG cold exergy utilization for generating electrical energy follows the steps in Figure 4. Unisim Design R390 .1 program helps equipment design calculations of the evaporation process with the same condition of LNG inputs, technical equipment limitations and sendout gas output on all schemes in steady state conditions.

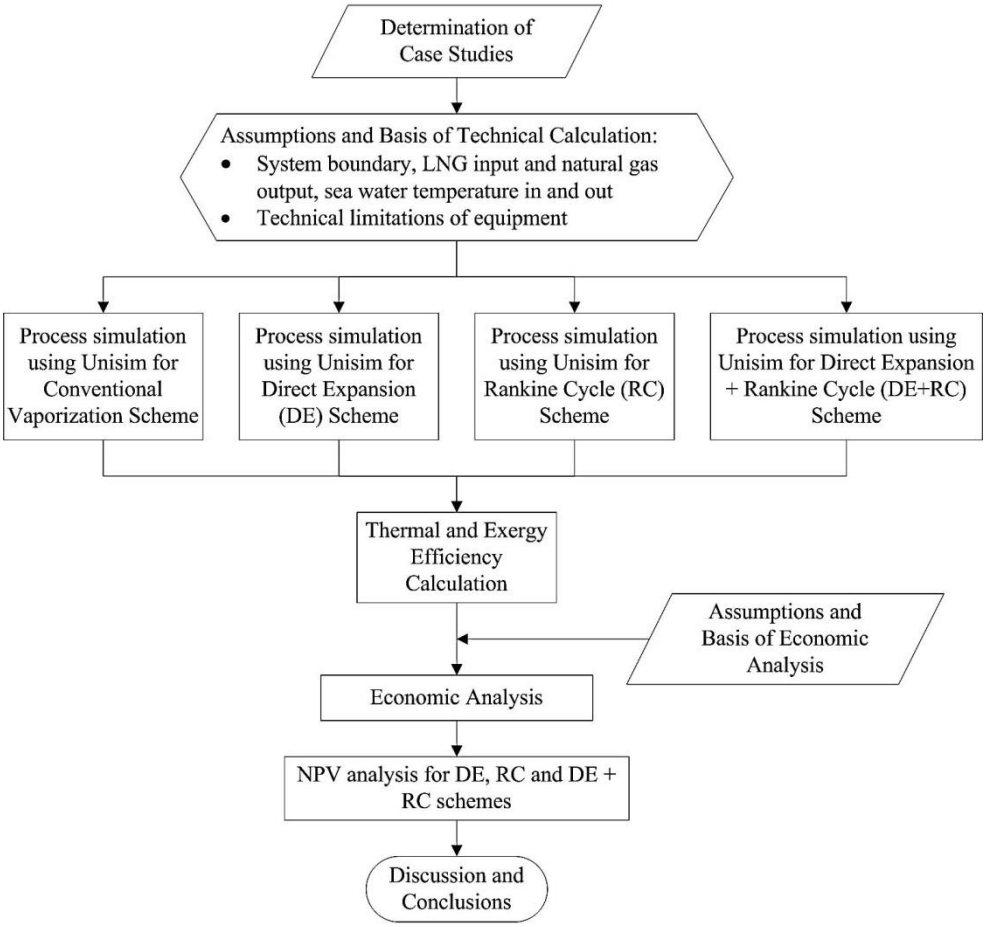

Figure 4. Research methodology

3. Results and discussion

3.1. Simulation and Efficiency Analysis Results

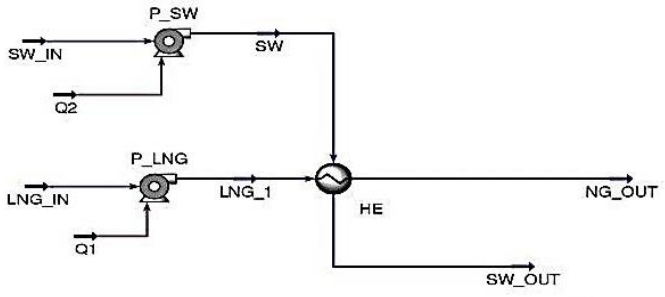

P_SW		
Energy	21.20	kW
Actual Vol. Flow	288.2	L/s
Adiabatic Efficiency	80.00	%

P_LNG		
Energy	99.20	kW
Actual Vol. Flow	32.93	L/s
Adiabatic Efficiency	80.00	%

HE		
Duty	1.252e+004	kW
UA	9.177e+005	kJ/C-h
Tube Side Delta T	177.9	K
Shell Side Delta T	-10.00	K

Figure 5. Simulation of conventional evaporation scheme

The result of the conventional evaporation scheme simulation in Figure 5 has negatif net work of 120.4 kW. This scheme required electricity of 2.22 kWh/ton LNG regasified and discards LNG cold exergy into sea water.

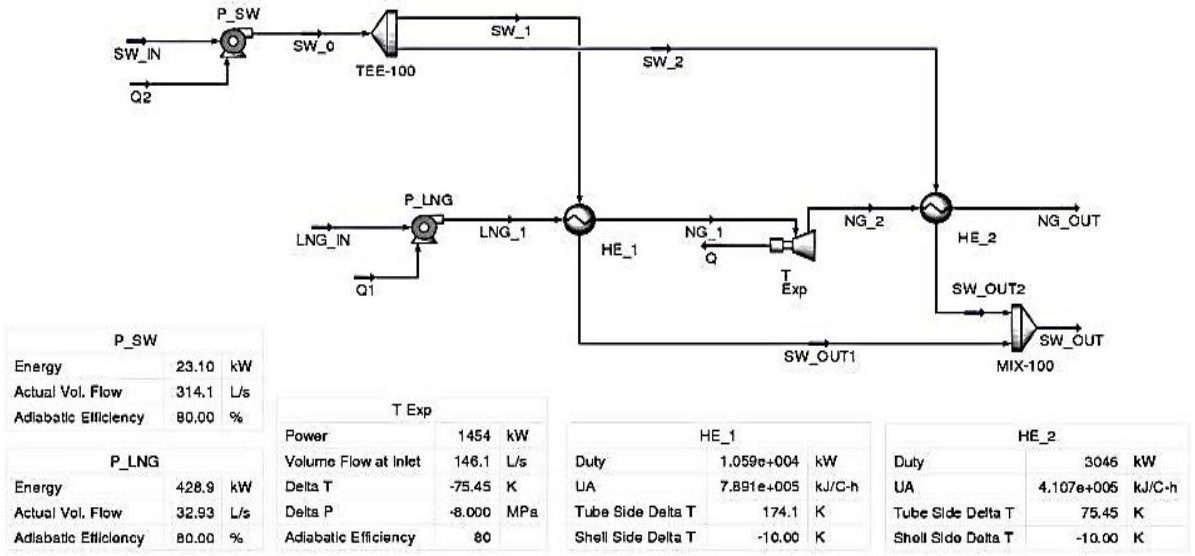

Figure 6. Simulation of DE scheme with turbine inlet pressure at 105 bar

The gas pressure entering the turbine is a key parameter in the DE scheme, because inlet pressure is directly proportional to the LNG and sea water pump power. However, the power generated by the turbine is not proportional to the turbine inlet pressure, where at a higher pressure the tendency of increasing power becomes slower. DE scheme simulation with turbine inlet pressure of 105 bar in Figure 6 have the ability to produce optimum net work of 929.04 kW and generating electrical energy of 17.13 kWh/ton LNG.

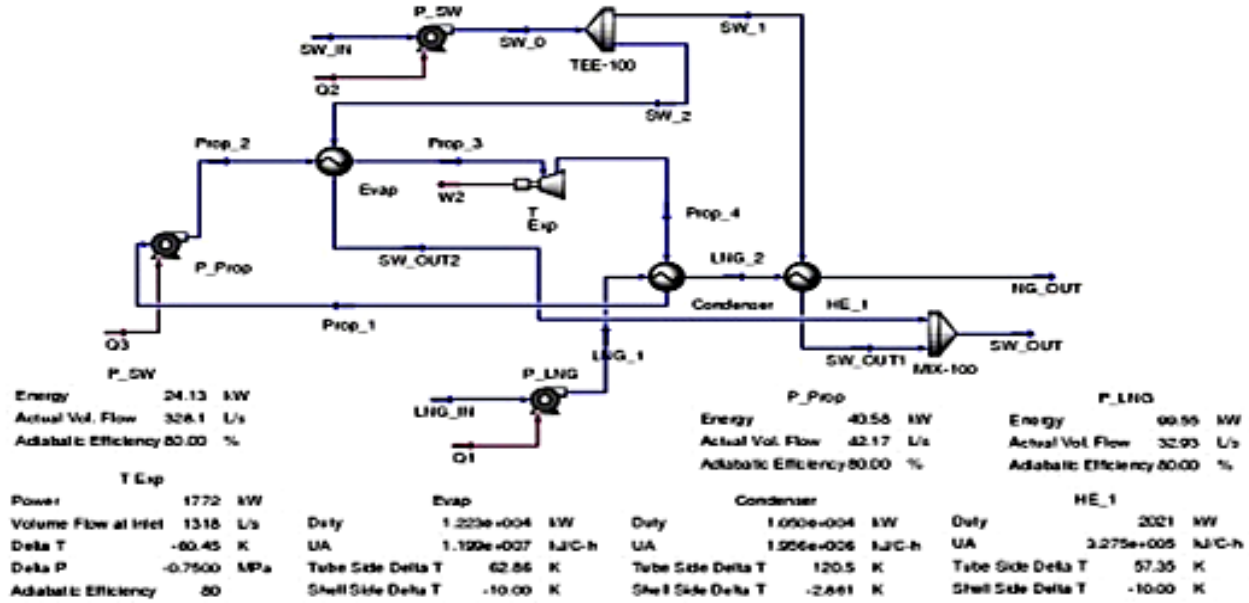

Figure 7. Simulation of RC scheme with turbine inlet pressure at 8.6 bar

The RC scheme only exploits the LNG thermal exergy to cool the condenser. The net work is affected by the turbine inlet pressure, where higher pressure means more power can be generated. However, turbine inlet pressure is limited by sea water inlet and outlet temperature of the evaporator. 8.6 bar is

the optimum pressure that can be used without causing temperature cross on the evaporator. The RC scheme in Figure 7 can produce an optimum net work of 1519.30 kW and electrical energy of 28.01 kWh/ton LNG.

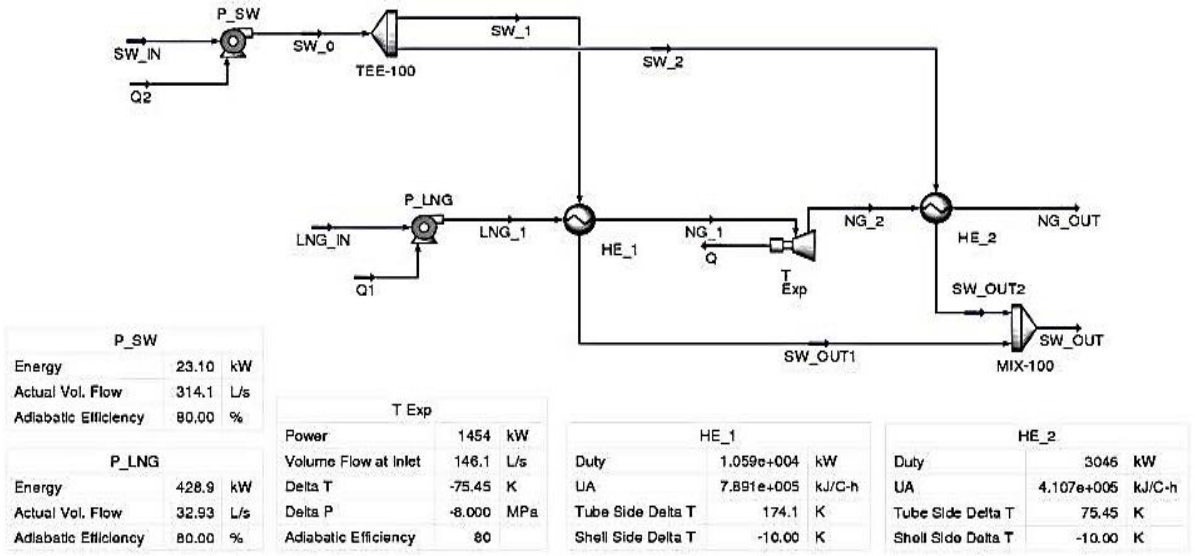

Figure 8. Simulation of DE+RC scheme with turbine 1 and turbine 2 inlet pressure at 65 and 8.6 bar

The DE+RC combination scheme can take advantage of all physical exergy in LNG. The optimum net work of 2158.38 kW and the electrical energy of 39.80 kWh/ton LNG can be obtained by maximizing the turbine inlet pressure on the RC cycle of 8.6 bar and the turbine inlet pressure at the DE cycle of 65 bar as simulated in Figure 8.

The results of the efficiency analysis in Table 2 show that the combination scheme DE+RC has the highest thermal and exergy efficiency, followed by the RC scheme and the last place is DE scheme.

Table 2. Thermal and exergy efficiency analysis results

Scheme	Wnet (kW)	kWh/ton LNG	η thermal (%)	η exergy (%)
DE	929.04	17.13	6.82	52.12
RC	1,519.30	28.01	10.68	56.24
DE+RC	2,158.38	39.80	14.48	60.71

3.2. Result of economic analysis

The economic analysis results for the application of the LNG cold exergy utilization scheme at the Gresik LNG receiving terminal in Table 3 is calculated based on the technical data of the equipment from the simulations and economic assumptions mentioned before. The DE scheme is the only scheme that has a positive NPV value of USD 695,032 while the RC and combination of DE + RC scheme has a negative NPV value. Only DE scheme is economically feasible to be applied when the electricity selling price is USD 0.0586/kWh.

Table 3. Result of economic analysis of three LNG cold exergy utilization scheme

Scheme	Fixed Cap (USD)	First Year Opex (USD/y)	Revenue (USD/y)	NPV (USD)
DE	2,412,833	96,513	491,098	695,032
RC	6,237,960	249,518	803,114	-2,201,276
DE+RC	7,959,666	318,387	1,140,937	-1,813,362

4. Conclusion

Three alternative schemes of utilizing cold LNG exergy to generate electrical energy at Gresik LNG receiving terminals have been analysed technically and economically in this paper. Based on the case study, it is known that the Direct Expansion+Rankine Cycle combination scheme has the ability to produce the highest electrical energy and the highest efficiency of energy and exergy use. However, based on the economic analysis, only Direct Expansion scheme has positive value of NPV and feasible to be applied in Gresik.

5. Acknowledgement

The authors would like to thank all those who have supported this research, especially Direktorat Riset dan Pengabdian kepada Masyarakat Universitas Indonesia through PITTA 2018 grant.

6. References

[1] Blagin E V, Uglanov D A and Dovgyallo A 2016 *About LNG Energy Utilization Efficiency Estimation Proc. Eng.* vol **152** pp 209-18
[2] Gerrard A M 2000 *Guide to Capital Cost Estimating: Institution of Chemical Engineers* (Warwickshire: IChemE)
[3] Gómez M R, Garcia R F, Gómez J R, Carril J C 2014 *Review of Thermal Cycles Exploiting the Exergy of Liquefied Natural Gas in the Regasification Process Ren. Sust. Energy. Rev.* vol **38**) pp 781-95
[4] Kim H and Hong S 2006 *Review on Economical Efficiency of LNG Cold Energy Use in South Korea* (*Amsterdam: 23rd World Gas Conference*)
[5] Lee Y H and Kim H K 2015 *Energy and Exergy Analyses of a Combined Power Cycle using the Organic Rankine Cycle and The Cold Energy of Liquefied Natural Gas* (Entropy) vol **17**(9) pp 6412-32
[6] Ong C W and Chen C L 2018 *Techno-Economic Analysis of Seawater Freezing Desalination using Liquefied Natural Gas Chem. Eng. Trans.* vol **70** pp. 373-8
[7] Shi X and Che D 2009 *A Combined Power Cycle Utilizing Low-temperature Waste Heat and LNG Cold Energy Energy. Conv. Manag.* volume **50(3)** pp 567-75
[8] Son H, Cho H, Gim M, Yoon S, Jang M G, Kwak D H and Kim J K 2018 *Conceptual process design and optimization of refrigeration cycles for the liquefaction of boil-off gas Chem. Eng. Trans.* vol **70** pp 169-174