IOP Conference Series: Materials Science and Engineering

PAPER • **OPEN ACCESS**

Design and Implementation A Smart Monitoring and Controlling System of Three-Phase Photovoltaic Inverter Based on LoRa

To cite this article: Mohannad Jabbar Mnati *et al* 2019 *IOP Conf. Ser.: Mater. Sci. Eng.* **518** 042022

View the article online for updates and enhancements.

This content was downloaded from IP address 120.234.63.196 on 18/10/2019 at 05:53

IOP Conf. Series: Materials Science and Engineering **518** (2019) 042022 doi:10.1088/1757-899X/518/4/042022

Design and Implementation A Smart Monitoring and Controlling System of Three-Phase Photovoltaic Inverter Based on LoRa

Mohannad Jabbar Mnati[1,2], Aktham Hasan[2], Adnan Hussein Ali[3], Dimitar V. Bozalakov[1], Alex Van den Bossche[1]

[1]Department of Electrical Energy, Metals, Mechanical Constructions and Systems, Ghent University, Technologiepark Zwijnaarde 913, B-9052 Zwijnaarde, Gent, Belgium
[2] Department of Electronic Technology, Institute of Technology Baghdad, Middle Technical University, Baghdad, Iraq.
[3]Technical Instructors Training Institute, Middle Technical University, Baghdad, Iraq.
E-mail: mohannad.mnati@ugent.be (Mohannad Jabbar Mnati)

Abstract. In this paper, a new smart monitor and control system has been designed for injected power application to grid from a three-phase photovoltaic inverter (a smart monitor and control system (SMCS)). The system consists two main units. Firstly, the control system unit: this unit connects directly to the inverter to measure the output voltage of three-phase photovoltaic inverter and the control circuit, It can turn the inverter 'on' or 'off' from a long distance. Secondly, the monitoring unit: this unit is designed to monitor the states of the photovoltaic inverter system from long distances. It has two monitoring options OLED and a smartphone monitoring application. LoRa technique (long range) used to send and receive data between controllers system and monitoring system. LoRa is a new type of wireless communication technology within the Internet of Things (IoT). The SMCS application has been designed by using open source software "MIT App Inventor 2"; this application is used to sends and receives the data from a control unit by using Bluetooth as a wireless communication in order to monitor and control the whole system. The main advantage of the SMCS that it can monitor and control three-phase photovoltaic inverters that have been installed in remote and rural areas.

1. Introduction

Due to the development of Internet of Things (IoT) technology and high-speed communication technologies, wireless communications now provide people with a convenient, high speed and efficiency, and efficient way in which to control the electrical and electronic devices from long distances. Wireless communication has been widely used in medicine and industrial production, as well as in applications used by the public. It is especially useful when transferring data from remote and dangerous areas [1]-[5].

Several methods are used to monitor and control the three-phase photovoltaic inverter systems with different types of wireless sensor networks (like Wi-Fi, ZigBee etc.). The most important factors in wireless communication are the safety and flexibility it offers, having no requirement for technical staff in the actual field as there are solar panels and inverters that can monitor and control the system [6]-[10].

In this paper, a new wireless network has been used to monitor and control the injected power to grid from three-phase photovoltaic inverter tied to grid; this network is called a LoRa network [11,12].

Content from this work may be used under the terms of the Creative Commons Attribution 3.0 licence. Any further distribution of this work must maintain attribution to the author(s) and the title of the work, journal citation and DOI.
Published under licence by IOP Publishing Ltd

The main considerations when choosing to use LoRa are that it is designed for long-range communication and that it requires a low level of power consumption. The aim of this work is to design a new smart monitoring and controlling system (SMCS) that will be used to monitor and control the status of a three-phase photovoltaic inverter system tied to grid from long-range areas with low power consumption. The main part of the full system is the LoRa Kit 32. This kit is a development board that is cost effective, has a low bit-rate, and a long-range low-power consumption. The main chip used is the Lexin ESP32 and the Tensilica LX6 dual-core processor.

Figure 1 presents the full SMCS system. This system can be divided into two units. Unit (1) measures and controls circuits that are directly connected to the photovoltaic inverter system in order to measure the status of the system. It then sends the data to the main monitor unit using LoRa as a wireless communication network. Unit (2) is the monitoring and control circuit. This circuit receives the data from a control circuit using the LoRa network then presents the system's status on OLED and sends the same data to the end user, who can then monitor the situation on a smartphone application.

The MIT App Inventor 2 is one of the most important open-source programs provided by Google. This software has been used to design the application that monitors and controls the whole system. This application can only be used by Android smartphones and tablets [13].

2. System description

Figure 1 presents the full architecture of the monitoring and control of the output power of the three-phase photovoltaic inverter (i.e., the SMCS). This system is an interface between the station (the monitor unit) and the three-phase photovoltaic inverter (the control unit). The full SMCS system shown in Figure 1 can be divided into two parts (units).

2.1 Control unit: the control unit (or the measuring and control circuit)

This circuit is connected across the inverter in order to check the inverter's output voltage and to turn it 'on' or 'off'. This circuit uses the LoRa Kit 32 and the LoRa technique to send and receive the data from the base station unit's (monitoring circuit).

2.2 Monitoring unit. This unit divided into two parts, as follows.

- The monitoring part (or the monitoring and control circuit). This part is installed in the base station used for monitoring and control. This unit uses two types of wireless communication techniques: the LoRa technique (between the control and monitor units) and the Bluetooth technique (between the monitoring unit and the smartphone application (i.e., the end user)). This unit can display the data on an OLED screen that is connected directly to the microcontroller unit (LoRa Kit 32) and smartphone application.
- A new smartphone application. This application is a special progr0am that has been designed for the purpose of monitoring and controlling the full system. The application sends and receives the data to monitoring unit, using Bluetooth as a wireless communication.

Figure 1. Full architecture of the monitoring and control of the photovoltaic system

3. SMCS system architecture

In this section, we look at the hardware model and the software used by the SMCS of a three-phase photoelectric inverter.

3.1 Hardware architecture of the SMCS

The hardware architecture of the SMCS is divided into control and monitor boards. The main component in the SMCS's control and monitor boards is the LoRa Kit 32. This kit is a new development board, providing low-cost and effective communication with a low bit-rate and long-range and low-power consumption. The main chip used is the Lexin ESP32 and the Tensilica LX6 dual-core processor. Figure 2(a) shows the LoRa Kit 32. The kit's main properties are presented in Table I.Table II. offers a short summary comparison between Bluetooth, Wi-Fi, 2G/3G and LoRa communication techniques.

TABLE 1. MAIN PROPERTIES OF THE LORA KIT 32

Parameter	Value
Frequency	240 MHz
Flash	32M-Bits
Type of processor	Tensilica LX6 Dual Core
Master chip	ESP32
LoRa chip	SX1276
Communication distance	Up to 2.8 km
Computing capacity	Up to 600DMIPS
Operating voltage	3.3-7V
Operating temperature	-40 to +90 ℃
USB adapter chip	CP2102

TABLE 2. COMPARISON WITH SOME TYPES OF WIRELESS COMMUNICATION

	Bluetooth	Wi-Fi	LoRa	2G/3G
Range	Several Km	Several Km	Up to 15 Km	Several Km
Power	Medium	Medium	Low	High
Cost	Low	Low	Low	High
Data-Rate	In-Home	In-Home	Low	High
Battery Life	Short	Short	Long	Short
Frequency	2.4 GHz	2.4 GHz	<1 GHz	Cellular bands

a) (b) (c)

Figure 2. The main practical units of the SMCS: (a) the LoRa Kit 32; (b) the three-phase voltage sensor unit; (c) the control unit.

3.2 The control board.

The control board (or the measuring and control board) is directly connected to a three-phase photovoltaic inverter. It can be divided into three circuits: measuring, control, and communication.

1. **The measuring board. This board in shown in Figure 2(b), with its circuit shown in Figure 3(a). Its circuit consists of a three-phase optocoupler isolation circuit connected to the output of the three-phase photovoltaic inverter in order to check the output voltage. This circuit has been tested on a 250VAC; when the voltage of the grid is greater than 200VAC, then the output of the optocoupler will be 'low'. The output of optocoupler circuit is 'low' because the optocoupler is connected to the ground; otherwise, the output is 'high'.**
2. **Control circuit. The control board in Figure 2(c) and the circuit in Figure 3(b). was used to turn the inverter 'on' or 'off 'by disconnecting the DC link voltage.**
3. **Communication and microcontroller circuit. The LoRa communication board in Figure 2(a) was used to send the status of the inverter to the monitoring unit and to receive the data to turn the inverter 'on' or 'off'. The LoRa model is a part of the LoRa Kit 32.**

(a)

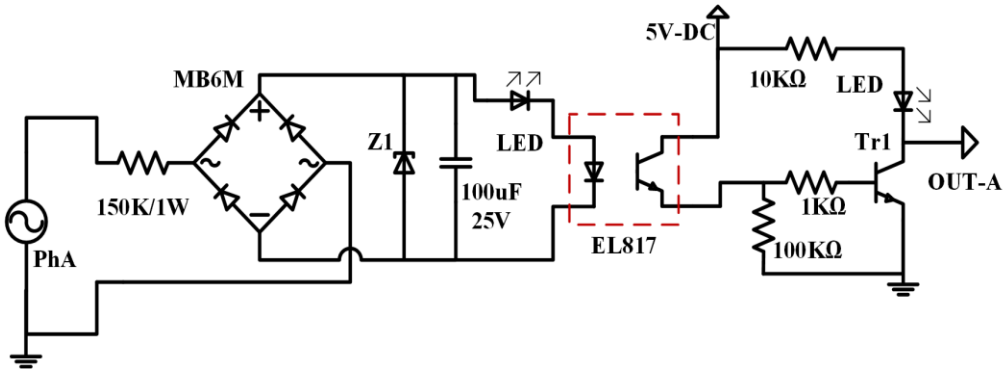

(b)

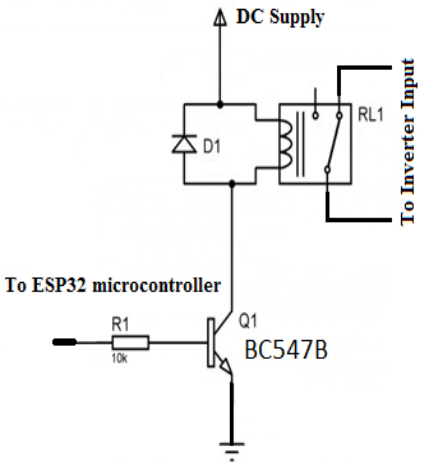

Figure 3. The SMCS circuits: (a) the voltage sensors circuit; (b) the control circuit.

3.3 The monitoring board.

The monitoring board (or the monitoring and control board) use the LoRa Kit 32 with an OLED. The main function of this board is to communicate between the control board and the end user. The monitoring board sends and receives data from the control board using the LoRa technique as a wireless communication. It then sends and receives data to/from the end user via Bluetooth, monitoring this data via a smartphone application.

3.4 Software and flowchart of the SMCS

Two types of platform programming languages have been used in this work.

3.5 The ESP32 microcontroller platform.

The first integrated development environment (IDE) is an open-source software used to write programs for an ESP32 microcontroller for control and monitor boards.
1. The control board program. Figure 4(a) shows a flowchart of the control board (the measuring and control board). This flowchart shows how to check the status of the output voltage of the three-phase photovoltaic inverter and then send the data to the monitor board using the LoRa communication technique. Additionally, it shows how to turn the inverter 'on' or 'off 'according to the data received from the monitoring and control board.
2. The monitor board program. Figure 4(b) shows a flowchart of the monitoring board (monitor and control board). Two types of wireless communication systems (LoRa and Bluetooth communication techniques) were used in this program. This flowchart shows how this board receives the data from the control board and presents it in the OLED, then sends the same data to the end user via Bluetooth, displaying it on a smartphone application.

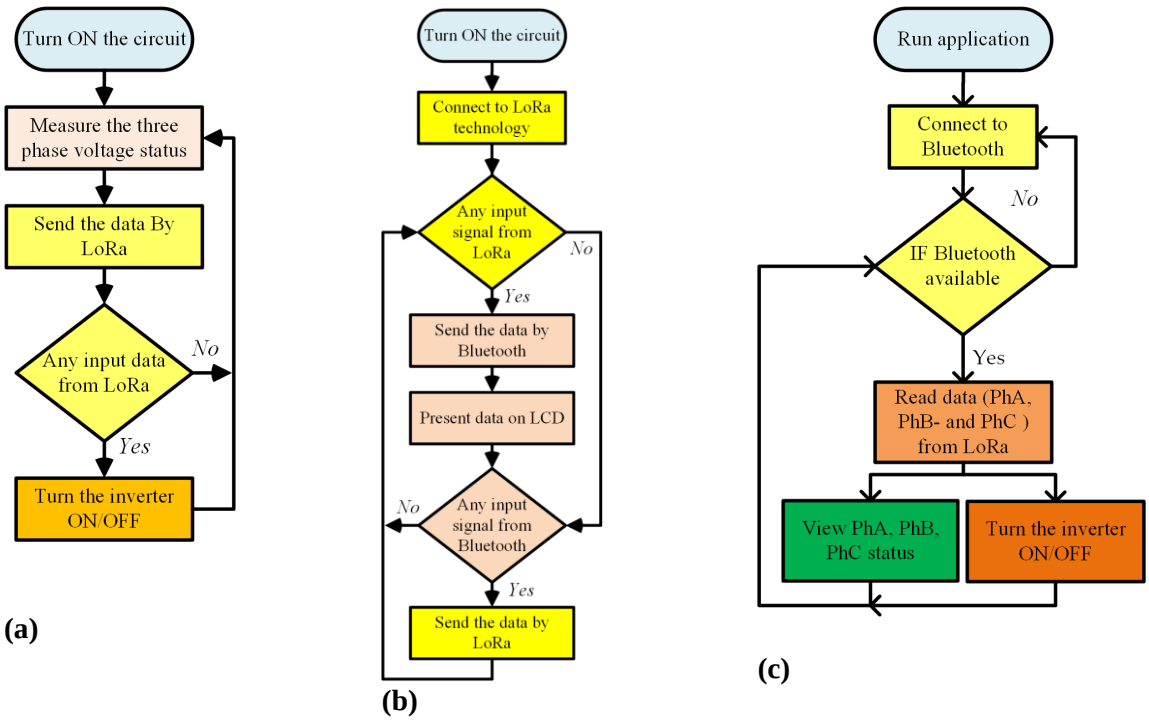

Figure 4. Flowcharts detailing the SMCS: (a) control unit flowchart; (b) monitoring unit flowchart; (c) smartphone application flowchart.

3.6 *The smartphone application platform.*

The second program monitors the received data from the monitoring microcontroller. The monitoring software of the SMCS is a new smartphone application that is designed to be installed on an Android smartphone or tablet for the purpose of monitoring and control. The application program was designed using the open-source MIT App Inventor 2. This platform is an open-source environment application provided by Google for creating applications on an Android smartphone.

The last flowchart (Figure 4(c)) shows the smartphone application program. This flowchart shows how the application sends and receives the data from the monitoring board via Bluetooth.

4. Experimental results

Figure 5 presents the full experimental smart monitoring and control system for the three-phase photovoltaic inverter. The measuring and control circuit is shown in Figure 5(a) and the monitoring and control circuit is shown in Figure 5(b). The full system has been tested in the laboratory to prove its efficacy. The state of the output voltage of the three-phase inverter is displayed on the OLED on monitoring board.

The final user interface for the smartphone monitoring application SMCS is presented in Figure 6. Figure 6(a) presents the monitoring application's user interface before Bluetooth connection and with no output voltage. Figure 6(b) presents the same user interface after connection to Bluetooth with a monitoring and control circuit; this view presents no output voltage from the three-phase photovoltaic inverter and the status of the inverter is 'off'. Finally, Figure 6(c) presents the status of the inverter as 'on', as well as displaying the three-phase inverter output voltage.

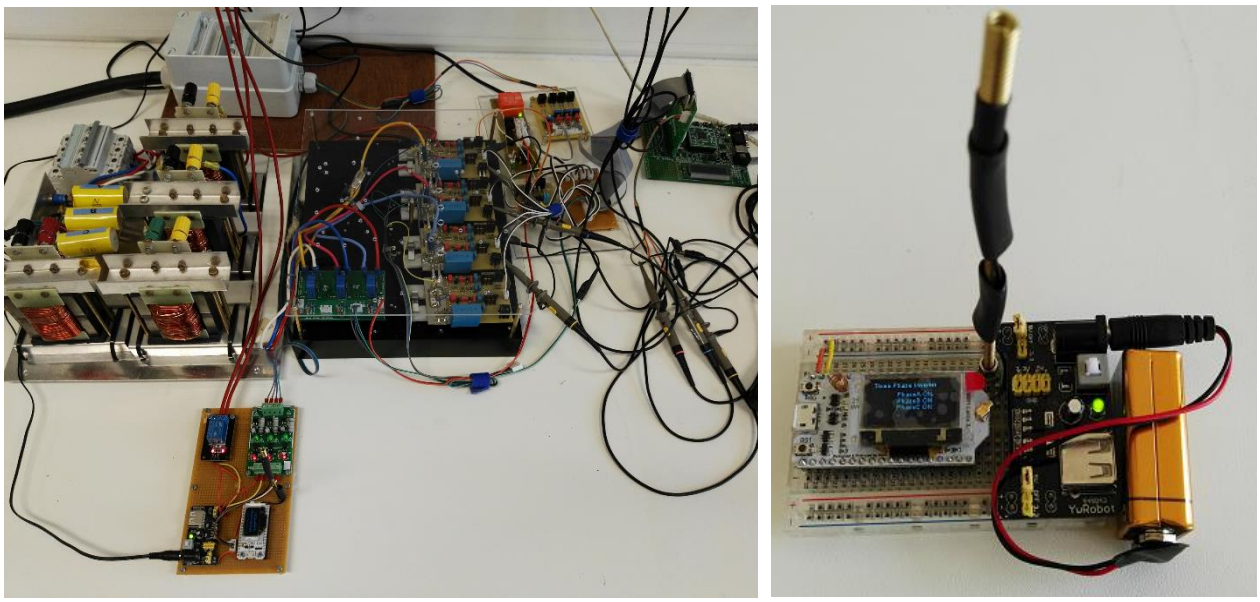

(a) (b)

Figure 5. Final headwear system of the SMCS: (a) control unit; (b) monitoring unit.

(a) (b) (c)

Figure 6. User interface of the SMCS application: (a) Bluetooth not connected; (b) Bluetooth connected and inverter OFF; (c) Bluetooth connected and inverter ON.

5. Conclusion

In this work, we have designed a smart monitoring and control system for the management of renewable energy harvested using a three-phase photovoltaic inverter tied to grid. The LoRa technology has been used as a communication network between the three-phase photovoltaic inverter system and the main monitoring power station. A hardware and LoRa network with a real three-phase inverter have been successfully designed and implemented in the laboratory. In addition to the use of LoRa technology, Bluetooth communication was used to read the data using a smartphone application that has been especially designed to monitor and control for this purpose.

The advantages of the final system in this paper is to monitor the photovoltaic inverters that have been installed in remote and rural areas with low-cost and high performance.

The future of using this technology (LoRa technology) is to connect the entire system over the Internet and allow the connected devices to talk to each other for the purpose of controlling the energy generated by photovoltaic inverter systems**.**

References

[1] Arvindan A N and Keerthika D 2016 Experimental investigation of remote control via Android smart phone of arduino-based automated irrigation system using moisture sensor *3rd Int. Conf. Electr. Energy Syst.* ICEES 2016, pp. 168–175.

[2] Mnati M J, Hasan A, Bozalakov D V, Bossche A V 2018 Smart monitoring and controlling of Three-phase photovoltaic inverter system using lora technology *6th Eur. Conf. Ren. Energy Sys.* 25-27 June Istanbul, Turkey

[3] Jamaluddin A, Harjunowibowo D, Rahardjo D T, Adhitama E and Hadi S 2016 Wireless Water Flow Monitoring Based On Android Smartphone *Int. Conf. Ind. Mech. Electr. Chem. Eng.*, pp.1–5.

[4] Mnati M J, Van A, den Bossche and Chisab R 2017 A Smart Voltage and Current Monitoring System for Three-phase Inverters Using an Android Smartphone *Application Sensors* **17** 872.

[5] Mnati M J, Chisab R F and Bossche A V D 2017 A smart distance power electronic measurement using smartphone applications in *19th European Conference on Power Electronics and Applications*, EPE 2017 ECCE Europe, 2017 Janua, pp. 1–11.

[6] Salamone F, Belussi L, Danza L, Ghellere M and Meroni I 2016 An open source "smart lamp" for the optimization of plant systems and thermal comfort of offices *Sensors* **16** doi:10.3390/s16030338.

[7] Gill S P S 2012 Smart Power Monitoring Utility System Using Wireless Sensor Networks. In Proceedings of the *Sixth International Conference on Sensing Technology*, Kolkata, India, 18–21 December pp. 5–114.

[8] Sung W T, Lin J S, 2013 Design and implementation of a smart LED lighting system using a self-adaptive weighted data fusion algorithm *Sensors* **13** 16915–16939.

[9] Ilippo D, Gennaro S F, Matese A, Mancin M, Primicerio J and Palliotti A 2014 An open-source and low-cost monitoring system for precision enology *Sensors* **14** 23388–23397.

[10] Kim K and Myung H 2015 Sensor node for remote monitoring of waterborne disease-causing bacteria *Sensors* **15** 10569–10579.

[11] Semtech 2015 SX1276/77/78/79 Datasheet, no. March, p. 132.

[12] Tensilica Inc. 2014 Xtensa Instruction Set Architecture (ISA) Reference Manual **vol. 95054**, no. 408.

[13] Available online: http://appinventor.mit.edu/explore/index-2.html

Acknowledgment

The first author appreciates the Ministry of Higher Education and Scientific Research/IRAQ and Special Research of Ghent University for the financial support during this work.