IOP Conference Series: Materials Science and Engineering

PAPER • **OPEN ACCESS**

Formation of structural and hierarchical model of needs in production personnel for the purpose of forecasting their professional training

To cite this article: N V Ketko *et al* 2019 *IOP Conf. Ser.: Mater. Sci. Eng.* **483** 012079

View the article online for updates and enhancements.

This content was downloaded from IP address 115.29.3.37 on 18/10/2019 at 02:39

IOP Conf. Series: Materials Science and Engineering **483** (2019) 012079 doi:10.1088/1757-899X/483/1/012079

Formation of structural and hierarchical model of needs in production personnel for the purpose of forecasting their professional training

N V Ketko, O E Akimova, S V Zemlyanskaya, I V Dneprovskaya, E M Vitalieva

Volgograd State Technical University, 400005, Volgograd, Lenin avenue,28 Russia
Volgograd State University, 400062, Volgograd, Universitetskiy avenue,100 Russia

zemlyanskayasv@volsu.ru, akimovann25@mail.ru

Abstract: The article deals with the problems of professional training of industrial personnel, namely the issues of coordination of training programs with the existing needs of employers. The authors propose an algorithm for constructing a structural and hierarchical model that allows to visualise the needs of employers in professional staff in the form of a hierarchy, built in descending order of their importance.

1. Introduction

Modernity is characterised by the increasing role of higher education, which is the most important condition for the progress of society. The degree of influence of higher education on the development of the state and the country as a whole in different periods of time is determined primarily by indicators of its quality, and therefore at present, in the education system there is no priority higher than the quality.

In the academic community, the problem of the quality of education is recognised as a sophisticated and complex scientific and historical problem. No educational system in the world can fully satisfy the world academic community in matters of the system of provision (management) and evaluation of the quality of educationx [5, 6].

A common problem in Russia is the recurrent dissatisfaction of state, state and public education management bodies, as well as the general public and employers with the quality of professional training. However, it should be noted that in modern conditions the quality of training determines the future of universities, which, like other economic entities, have entered the path of competition for consumers of their services. These circumstances stimulate the search for more effective approaches to the management of the quality of education, taking into account international trends in this area.

It should be noted that the main trend of improving the quality of vocational education is a purposeful transformation in the activities of educational institutions within a number of characteristics, taking into account the implementation of a set of balanced interests of students, employers, society and the state [7].

The interests of students in terms of the quality of professional training are in the implementation of the constitutional right of a person and a citizen to receive the necessary professional training, used for the purpose of the possibility of conducting in the future not prohibited by law work, as well as improving the personal characteristics of the individual, capable of further favorable impact on his professional career.

The employer, within the framework of his / her interests, after passing the professional training, intends to obtain a competent employee capable of demonstrating high results for the benefit of the enterprise, organisation or institution [8].

The plane of the interests of society in professional training is to prepare a large number of competent professionals to perform the most important social tasks in various areas of life.

It is accepted to allocate two approaches to the solution of a problem of quality assurance in

Content from this work may be used under the terms of the Creative Commons Attribution 3.0 licence. Any further distribution of this work must maintain attribution to the author(s) and the title of the work, journal citation and DOI.
Published under licence by IOP Publishing Ltd

professional training of the personnel conforming to modern requirements:

1. Improving the performance of the University through the introduction of control schemes at all stages of management. To this end, the development of normative documentation of the quality management system of the University (according to international ISO standards).
2. Improvement of all processes in the University aimed at ensuring the quality of professional training by creating objective prerequisites for the involvement of all employees in this process (according to the European standard TQM).

However, ensuring the quality of professional training is not a primary issue, since the main issue is the directions of training, the specialists of which professions to train, in which specialists there is a need for employers [9].

Since the choice of professional direction depends on many factors, so this system, which complicates the process of planning and forecasting, for these purposes it is advisable to apply the methods of fuzzy set theory.

2. Application of mathematical methods for building a structural-hierarchical model

Methods of fuzzy set theory allow not only to investigate the state of the system, but also help the expert to make a certain decision. The advantage of these methods is that they allow the use of not only quantitative but also qualitative indicators, and therefore remove some of the limitations associated with the inability to use indicators with qualitative assessments.

There are methods using different approaches to the study. In the framework of the theory of fuzzy sets, this article uses one method – the Maximin convolution. In order to determine the most demanded professions that act as alternatives, the evaluation criteria are identified, which are the factors on which these alternatives depend, or which allow to assess the significance of an alternative. The significance assessment process is carried out as follows.

The refinement of qualitative parameters and the discussion of the importance of alternatives by experts allow for a compromise in the assessments.

- average assessment:

$$m_j = \overline{m}_{ij} \,/\, \sum_{j=1,i=1}^{N,K} \overline{m}_{ij} \,,$$

where m_j – average assessment of j-motive;

$\overline{m}_{ij}$ - numerical score «weight» of j-motive, given by i-expert

- the weighted average assessment:

$$m_j = \sum_{i=1}^{N} m_{ij} * a_i \,/\, \sum_{i=1}^{N} m_{ij} \,,$$

where m_j – average weighted numerical score of j-motive;
m_{ij} – numerical score of the average assessment of j-motive by i-expert;
a_i – weight, reflecting the importance of i-expert.

Convolution of point estimates of alternatives is carried out in accordance with the algorithm presented below, based on the method of fuzzy sets.

In the process of basic calculations, the values of the preference ratio for each pair of alternatives M (a, b) are determined by the formula (1):

$$M(a,b) = \frac{m_a - m_b}{n_j}, \quad \text{if } m_a \rangle\ m_b \qquad (1)$$

0, otherwise,

where ma,b is the significance of the motive a in reference to motive b to the employee;
nj – upper limit of the scale of assessments of the experts of the explanation;
j - ordinal number of the scale developed by the experts;
M (a,b) is a function of the consent that the motive a is better for a worker than motive b.
A preference relation is called fuzzy, as is linguistic variables, reflecting the assessment of the experts.
The calculation results are presented in the form of the following matrix:

$$M(a,b)=\begin{vmatrix} \frac{m_{11}-m_{21}}{n_j} & \frac{m_{12}-m_{22}}{n_j} & \ldots\ldots & \frac{m_{1i}-m_{2i}}{n_j} \\ \frac{m_{11}-m_{31}}{n_j} & \frac{m_{12}-m_{32}}{n_j} & \ldots\ldots & \frac{m_{1i}-m_{3i}}{n_j} \\ \ldots\ldots\ldots\ldots & \ldots\ldots\ldots\ldots & \ldots\ldots\ldots\ldots & \ldots\ldots\ldots\ldots \\ \frac{m_{11}-m_{k1}}{n_j} & \frac{m_{12}-m_{k2}}{n_j} & \ldots\ldots & \frac{m_{1i}-m_{ki}}{n_j} \end{vmatrix}$$

For the ranking of alternatives, the fuzzy sets of dominance of one motive over another is determined, which is determined by the function μD (a, b) characterising the intensity of its dominance:

$$\mu(a,b)=\begin{cases} M(a,b)-M(b,a), \text{ если } M(a,b)\rangle M(b,a) \\ 0, \text{ otherwise,} \end{cases} \quad (2)$$

where μ (a,b) is a function of preferences, reflecting the intensity of the domination of the motive a over the motive b;
M (a,b) is a function of agreement that motive a is preferable to employee than motive b;
M (b,a) is a function of disagreement that motive a is preferable for an employee than motive B.

The fuzzy set of dominance of one alternative over another is determined by the function μD (k,l). The result of determining the dominance ratio is also presented in the form of a matrix, the elements of which are the difference of the elements of the previous matrix:

$$M(a,b)=\begin{vmatrix} M(1,2)-M(2,1) & \ldots\ldots\ldots\ldots & M(1,b)-M(a,1) \\ M(2,1)-M(1,2) & \ldots\ldots\ldots\ldots & M(2,b)-M(a,2) \\ \ldots\ldots\ldots\ldots & \ldots\ldots\ldots\ldots & \ldots\ldots\ldots\ldots \\ M(a,1)-M(1,b) & \ldots\ldots\ldots\ldots & M(a,b)-M(b,a) \end{vmatrix}$$

To improve the objectivity of the assessment is determined by the ratio of non-dominant μND (k,l).

$$\mu_{ND}(a,b)=1-\mu_{D}(a,b) \quad (3)$$

where μND (a, b) is a preference function reflecting the intensity of non – dominant motive a over motive b.

Calculations of the non-dominant ratio we summarise the resulting matrix as follows:

$$\mu_{ND}(a,b)=\begin{vmatrix} 1-\sup\mu_{ND}(1,1) & 1-\sup\mu_{ND}(1,2) & ..... & 1-\sup\mu_{ND}(1,b) \\ 1-\sup\mu_{ND}(2,1) & 1-\sup\mu_{ND}(2,2) & ..... & 1-\sup\mu_{ND}(2,b) \\ ..... & ..... & ..... & ..... \\ 1-\sup\mu_{ND}(a,1) & 1-\sup\mu_{ND}(a,2) & ..... & 1-\sup\mu_{ND}(a,b) \end{vmatrix}$$

After determining the non-dominant relations, the obtained alternative series is compared with the already formed domination series [12]. The second row should be opposite to the first. Otherwise, it is necessary to repeat the approval procedure. The following is the calculation of the intensity of dominance of each alternative by the intersection of all motives μND (a,b) for all motives that are not dominated by any motives.

$$\mu_D^*(M_{\grave{a}})=\min\mu_{ND}(b,a)\underset{\substack{b=1,\dots,n\\ b\neq a}}{=}\min[1-\mu(a,b)]= \quad (4)$$
$$1-\max\mu_D(b,a)=1-\max[M(b,a)-M(a,b)]$$

where μ*(MA) is a function of the membership of an alternative to a set of non – dominant alternatives. (4)

$$\mu^*(M_{\grave{a}}^*)=\max_{a=1,\dots,n}\mu^*(M_a)=1-\min\left\{\max\left[\underset{\substack{a=1,\dots,n\\ b=1,\dots,n\\ b\neq a}}{M}(b,a)-M(a,b)\right]\right\} \quad (5)$$

where M*a are alternatives from a variety of non-dominant alternatives.

Next, a series of alternatives is constructed in descending order of the value of the preference ratio, i.e. if A1 > A2 > A3, etc.

After the formation of a number of alternatives arranged in descending order of their importance to build a structural and hierarchical model, presented below, which allows you to clearly see the most popular profession and accordingly adjust the training program.

Thus, planning and forecasting the needs of employers in professional personnel, through the construction of a structural and hierarchical model, will allow more effective development and implementation of the process of training of professional personnel, especially in the business sector [13]. Since the lack of the necessary professional production personnel is one of the main factors hindering the development of the business sector.

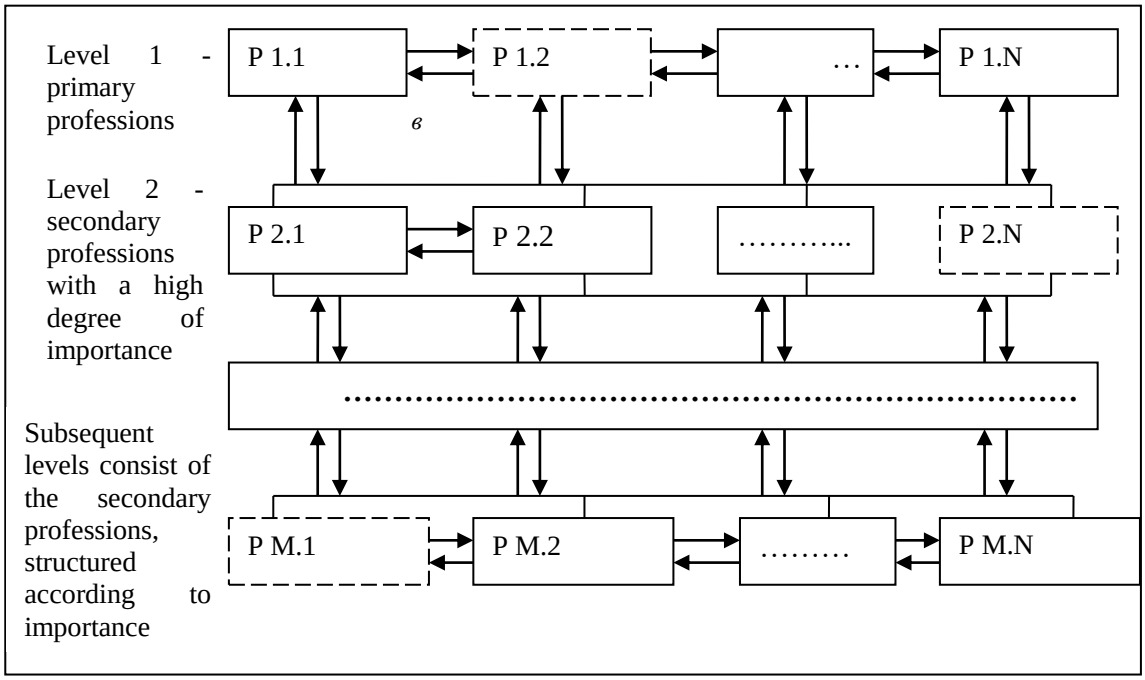

Figure 1. General view of the structural and hierarchical model of the importance of professions

3. Impact on the business sector

According to the Global Entrepreneurship Monitoring for 2016-2017, only 28.4% of respondents believe that they have sufficient knowledge and experience to start their own business. According to this indicator, Russia occupies one of the lowest places among all the countries of the project - 63 in developed countries, the figure is about 50% [10]. In this regard, it is necessary to improve the professionalism of personnel in the field of entrepreneurship through the development of educational programs based on state educational standards aimed at training qualified personnel, the creation of a network of educational institutions that implement educational programs for businesses [13].

According to the well-known Russian scientist Chepurenko, "entrepreneurs are born", not "made", but it does not exclude the need to identify the professional training of young people for entrepreneurial activity. The level of knowledge achieved in society, the modern organisation of the economy create the necessary prerequisites for the development of entrepreneurial abilities. Training of an entrepreneur has a dual direction: firstly, that is training depending on the nature (kind) of activity and, secondly, training in the field of human relations. It is necessary to introduce programs of acquaintance with business activity in secondary schools already, and to teach students of technical universities business skills (unfortunately, a significant part of our engineering universities still trains "generals for the last war"- hired specialists for large state-owned factories, not engineers and technology managers for medium-sized businesses) [11].

The first steps in this direction are just beginning to be made, in many universities began to appear profiles of training in entrepreneurship, however, while it is not fully developed [14].

Since the bulk of entrepreneurs in Russia and the world are representatives of the generation "X" (the so-called generation with a key on the neck, children who were accustomed to early independence, did their own lessons, were able to warm up their meals left on the stove), for them learning throughout life is the motto in life. Given the professionalism, integrity and responsibility of this generation, it is necessary to stimulate their self-employment (SE), as for X work is life.

From this point of view, it is interesting not only the programs within the framework of higher education, but also the programs within the framework of additional professional education. Such programs are implemented today by various organisations. For example, JSC "SME Corporation". It offers several training programs: "ABC of the entrepreneur" (creating a business from scratch) and"

School of Entrepreneurship" (business development). Training programs of JSC "Corporation "SME" can be passed both independently and by visiting trainings in organisations that form the infrastructure to support SMEs implementing training programs of the Corporation [15].

The program "ABC of the entrepreneur" is aimed at training potential and novice entrepreneurs to develop a business plan for the further implementation of the developed business project and the launch of a new business. In order to identify the most appropriate business idea, the Corporation has developed a module "Generation of business ideas".

The program "School of Entrepreneurship" is aimed at training actively functioning entrepreneurs who want to develop, expand or repurpose their business.

In addition, communication between the state and entrepreneurs through social networks is possible. If the materials set out in the training programs of the SME (Small and Medium Entrepreneurship) Corporation are presented in the format of short-duration videos, with the possibility of online assignments, this will receive a positive response.

Targeted training of production personnel in accordance with the needs of not only production, but also other sectors of the economy, not only contributes to the development of the business sector and the economy as a whole, but also acts as a tool to solve the problem of poverty.

4. Training as a tool to overcome poverty

Currently, Russian educational organisations do not smooth social inequality, and in some cases, on the contrary, it is aggravated. [2]. Indeed, the opportunity to get a quality education (starting from the pre-school level) increases for children from wealthy, full and well-to-do families. There is also a big difference in the quality of education between the regions and the Federal center, major cities and the province.

People born in poor families with low cultural and social needs cannot adapt, achieve career growth and high income. As a result, some of these people begin to put up with their situation and perceive poverty as the norm, others become criminals or addicted to bad habits.

It should also be noted that not always people who complete secondary vocational or higher education can find a suitable job with the best salary for them. Often the family even in the adult stage helps to adapt and find a job. At the same time, people from poor families have to adapt on their own. Only a few can overcome poverty and succeed in their careers. If only the economic dimension of poverty is to be understood, it is necessary to consider the number of people living below the subsistence level.

According to Rosstat (Russian Federal State Statistics Service), every seventh resident of Russia lives below the poverty line. According to statistics, in 2016 the number of people whose income was below the subsistence minimum increased by 300 thousand and reached 19.8 million people [3].

In 2018, the number of people in Russia who have an income below the subsistence minimum amounted to 20 million people.

Let us consider the dynamics of the number of people with income below the subsistence minimum from 2015 to 2018.

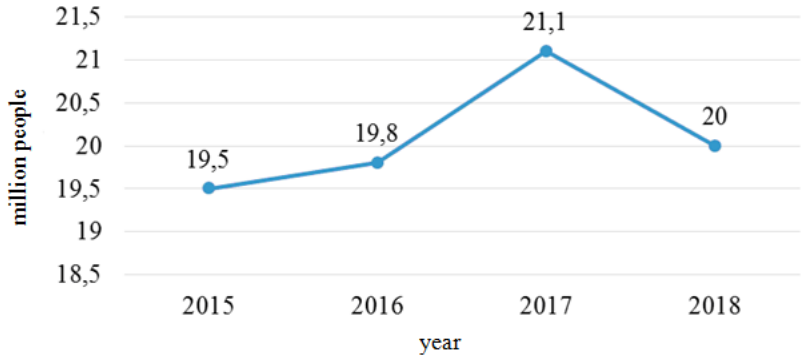

Figure 2. Dynamics of the number of people with income below the subsistence minimum in Russia 2016-2018

Source: author's materials [1] [4]

People who find themselves below the poverty line begin to perceive their standard of living as the norm, resigned to their position. In this regard, it is possible to speak about occurrence of the phenomenon of "institutional poverty".

Institutional poverty is the social and economic norms and rules that form the basis for meeting human needs at the most primitive level.

In order to overcome institutional poverty and enable individuals to improve their quality of life, it is necessary to formulate a set of measures for the state and public structures, as well as educational organisations at all levels.

In May 2018, the decree of the President of Russia declared the national goal to "halve the level of poverty in the Russian Federation" [2].

To implement the decree, Educational Institutions of Secondary Professional and Higher Education on their part can:

- develop a program of measures for the introduction of the profession for students;
- develop training courses and retraining of specialists relevant to each region. When developing courses, educational organisations should cooperate with regional labour and employment committees to determine the demand and relevance of professions and the correlation with the labour market.

The mechanism of interaction is shown in figure 3.

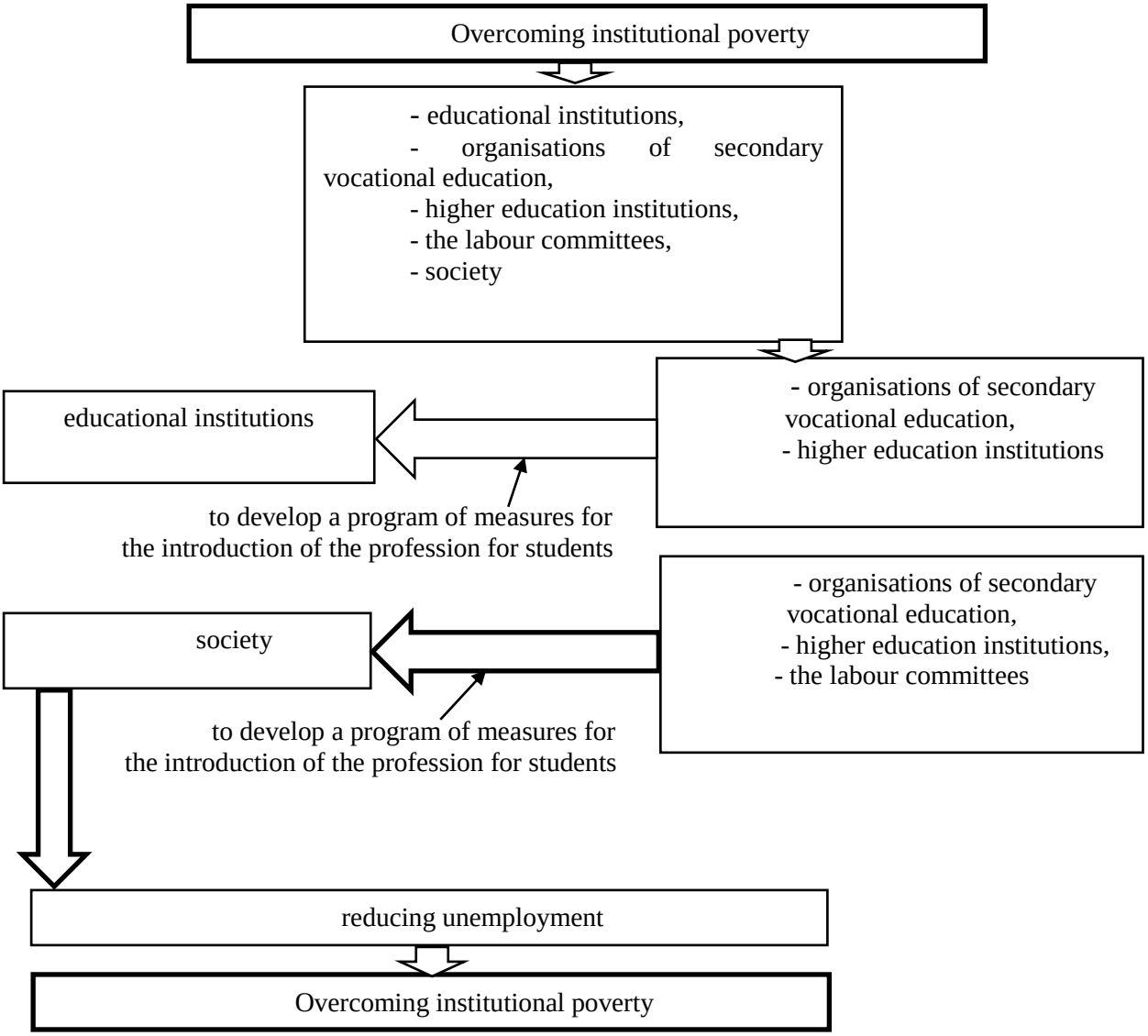

Figure 3. The mechanism of interaction with the labour market

Thus, the mechanism implements the possibility of overcoming institutional poverty. In this mechanism, the leading role is played by educational organisations, since it is in the learning process that the motivation of individuals to work and the desire for career growth should be formed. Periodic training or retraining allow to deepen or master new professions. In turn, work with students will form the desire to work and commitment to the specialty.

References:

[1] The poor counted less. The number of citizens with incomes below the subsistence minimum has decreased for the first time in five years [Electronic resource] Access Mode: https://iz.ru/768023/anna-ivushkina/bednykh-naschitali-menshe
[2] Education should be the main instrument of poverty reduction [Electronic resource] Access Mode: https://www.hse.ru/news/edu/220512836.html
[3] Rosstat. Standard of living [Electronic resource] Access Mode: http://www.gks.ru/wps/wcm/connect/rosstat_main/rosstat/ru/statistics/population/level/
[4] The number of people with incomes below the subsistence minimum in the first half of the year

decreased by 5.2% [electronic resource] Access Mode: https://rns!online/economy/CHislennost-lyudei-s-dohodami-nizhe-prozhitochnogo-minimuma-v-pervom-polugodii-sokratilas-na-52-2018-10-24/

[5] Andreychikov A V, Andreychikova O N 2000 Analysis, synthesis, planning decisions in Economics (Moscow: Finance and Statistics) 368p

[6] Zade L A 1976 The Notion of linguistic variable and its application to the adoption of approximate solutions (M.: Mir) 165p

[7] Trahtengerts E A 1998 Computerised decision support (M SINTEG) 376p

[8] Spandagos C 2018 Fuzzy model of residential energy decision-making considering behavioural economic concept *Applied Energy* **213** 611-625

[9] Lizunkov V, Politsinskaya E, Malushko E, Kindaev A, Minin M 2018 Population of the world and regions as the principal energy consumer *International journal of energy economics and policy* **8 (3)** 250-257

[10] James H Stock, Watson M W 2013 Variable Trends in Economic Time Series *Journal of Economic Perspectives* **2** (**3)** 147-174

[11] Ferreira R, Lizunkov V G, Politsinskaya E V 2017 Formation of entrepreneurial competencies of university graduates in conditions of transition to the universities of the third generation *Novosibirsk State Pedagogical University Bulletin* **7 (6)** 195-211

[12] Verkhovskaya O, Aleksandrova E, Bogatyreva K A, Dulepova M V, Shmeleva E V 2016/2017 National report Global entrepreneurship monitoring (Graduate School of Management St. Petersburg State University) 15

[13] Ergunova O T, Lizunkov V G, Malushko E Yu, Marchuk V I, Ignatenko A Yu 2017 Forming the system of strategic innovation management at the high-tech engineering enterprises *IOP Conference Series: Materials Science and Engineering* **177 (1)** 012046

[14] Chepurenko A Yu Entrepreneurship and Entrepreneurship Policy in Russia [Electronic resource] Access Mode: URL:http://nisse.ru/business/article/article_1797.html?effort=1

[15] Ergunova O, Lizunkov V, Blaginin V, Politsinskaya E, Shaykina O I 2018 Formation of the price mechanism for energy resources in Russia and the countries of the European union *International Journal of Energy Economics and Policy* **8 (1)** 122-127