PAPER • **OPEN ACCESS**

Modeling of silicon-germanium heterojunction bipolar transistors

To cite this article: A S Bakerenkov *et al* 2019 *IOP Conf. Ser.: Mater. Sci. Eng.* **475** 012002

View the article online for updates and enhancements.



IOP ebooks™

Bringing you innovative digital publishing with leading voices to create your essential collection of books in STEM research.

Start exploring the collection - download the first chapter of every title for free.

This content was downloaded from IP address 106.75.244.189 on 18/09/2019 at 23:12

IOP Conf. Series: Materials Science and Engineering 475 (2019) 012002 doi:10.1088/1757-899X/475/1/012002

Modeling of silicon-germanium heterojunction bipolar transistors

A S Bakerenkov[1], V A Felitsyn[1], A S Rodin[1] and Yu D Bursian[1]
[1]National Research Nuclear University MEPhI (MEPhI), Kashirskoe shosse 31, Moscow, 115409, Russian Federation

Corresponding author's e-mail address: ASBakerenkov@mephi.ru

Abstract. The results of measurements of current-voltage characteristics of SiGe transistors for different temperatures are presented. The extraction results of parameters of test structures of the silicon-germanium SiGe bipolar transistors are presented.

1. Introduction

Nowadays, silicon-germanium heterojunction bipolar transistors have a wide range of applications: microwave devices (low-noise amplifiers, voltage controlled generators, and receiver transmitter devices), ADC, DAC, frequency synthesizers, filters. The SiGe-technology can provide a significant contribution to the electronic component base, which operation does not depend on the environmental conditions [1-3].

The silicon-germanium heterojunction bipolar transistors have several advantages over conventional silicon transistors:

- low temperature dependence of the electrical parameters;
- high speed (cut-off frequency of 210 GHz, IBM, 2005. [4]);
- low noise level (0.6 dB at a gain 20.5 dB and a frequency of 3 GHz);
- increased current gain in the same design size.

These advantages do not lead to large changes in the production technological process of the transistors at the transition from the production of conventional silicon transistor to the silicon-germanium heterojunction bipolar transistors. Therefore production cost of silicon-germanium heterojunction bipolar transistors is almost the same as the conventional silicon transistors. In the process of designing integrated circuits (ICs) on the basis of the silicon-germanium heterojunction bipolar transistors, it is possible to use standard libraries and design methods.

For the development of microwave electronic devices based on silicon-germanium heterojunction technology, it is necessary to simulate the operation of this device at the design stage. Spice models of the electronic components which are part of the microwave devices are used in the development of complex models of microwave devices. One of these models is the model of SiGe heterojunction bipolar transistor, which is based on the model of Hummel-Pune. The purpose of this article is to extract the parameters of the model for different transistor operation temperatures. For the extraction of the parameters, test structures of the silicon-germanium heterojunction bipolar transistors are used.

Content from this work may be used under the terms of the Creative Commons Attribution 3.0 licence. Any further distribution of this work must maintain attribution to the author(s) and the title of the work, journal citation and DOI.
Published under licence by IOP Publishing Ltd

2. Description of samples SiGe bipolar transistors and testing

Research object is the high-frequency bipolar npn-transistors, which is produced using the BiCMOS technological process with design rules of 0.25 microns.

Transistor chip consists of two (SGB25V_016P) and four parallel-connected transistors npnVh (SGB25V_019P). The transistors with the size of the emitter 3.36 x 0.42 mm^2 are used. One transistor includes 16 emitters (the grid of emitters 8x2). Transistor chip includes the polysilicon resistors 3 kOm.

The structure which consists of two the SiGe heterojunction bipolar transistors is shown in Fig.1. Base, emitter, and collector regions are marked correspondingly «b», «e» and «c». The connecting circuit of the SiGe transistor chip with a pin of the microchip package is shown in Fig.2a. Photo of the finished SiGe transistor sample is shown in Fig.2b.

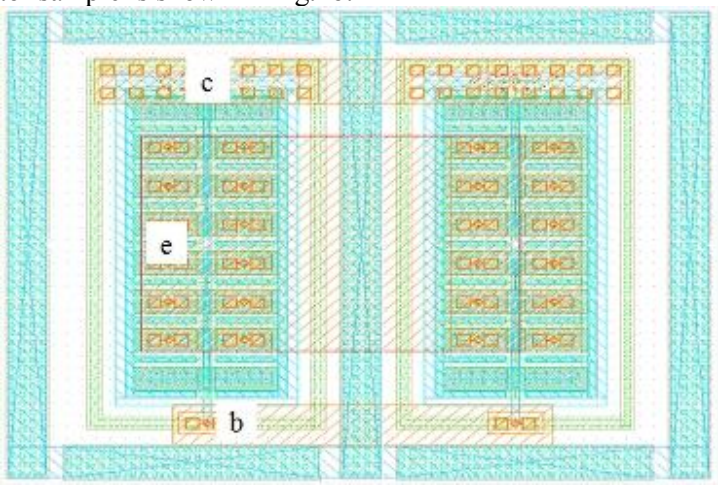

Figure 1. Topology of SiGe heterojunction bipolar transistor.

Fig. 2a shows the chip topology: large octagons – contact pads which are welded to the metal pins of the chip to the microchip package. Metallization is marked by dashed lines of orange and blue colors, polysilicon resistors – purple stripes with dots. Transistor blocks are located in the center. To increase the reliability and percentage production quality sample, base, emitter and collector pins is duplicated.

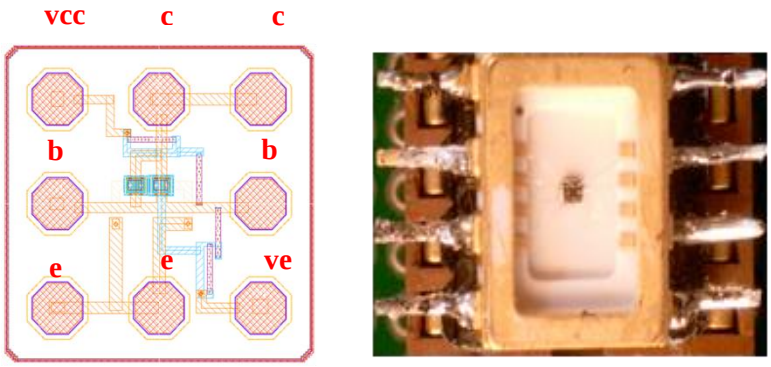

(a) (b)

Figure 2. The topology block of two transistors (a) and photo IC chip (b).

For the testing, these samples were used the measuring system and heat chamber. The measuring system consists of PC with the connected device in which integrated voltage sources and ammeters. The measuring system enables to measure a current-voltage characteristics (CVC) of the samples. The heat chamber enables to set the temperature of the sample at which the measured current-voltage characteristics.

3. Model of silicon-germanium heterojunction bipolar transistors

The Gummel–Poon bipolar transistor model for circuit simulation in LTSpice VI was used. This model has many parameters, most of which is used to set the frequency characteristics of the transistor. Because of in this paper static characteristics of bipolar devices are used, the circuit simulation is not required to set frequency parameter values. Part of the model parameters used to describe the transistor in reverse mode. Since, in operational amplifiers, transistors are used in the forward mode, the values of these parameters do not affect the simulation results.

Using this assumption, for base and collector current-voltage characteristics of bipolar transistor it's possible to write relationships:

$$I_c = I_s \exp(U_{eb}/\varphi_T), \quad (1)$$

$$I_b = (I_s/B_f) \exp(U_{eb}/\varphi_T) + I_{se} \exp(U_{eb} \quad (2)$$

in which I_c – collector current, I_b – base current, U_{eb} – emitter-base voltage, I_s, B_f, I_{se} и n_e – Gummel–Poon model parameters. Since the radiation degradation of the transistor is determined by the increase in the base current at constant collector current, it possible to assume that the parameter I_s does not change at radiation impact. The value of B_f defines pre-exponential multiplier of ideal base current component (proportional $\exp(U_{eb}/\varphi_T)$). This component of the base current is the sum of the currents in the emitter injection and recombination in the active base region. Since in modern transistor size of the active base region is small enough, recombination current in the active base region is much smaller than the current injected into the emitter.

4. Extraction parameters

As a result, CVC (Fig. 3) and the dependence of the static gain on the base-collector voltage for different temperatures for the case of the active and inverse mode are measured.

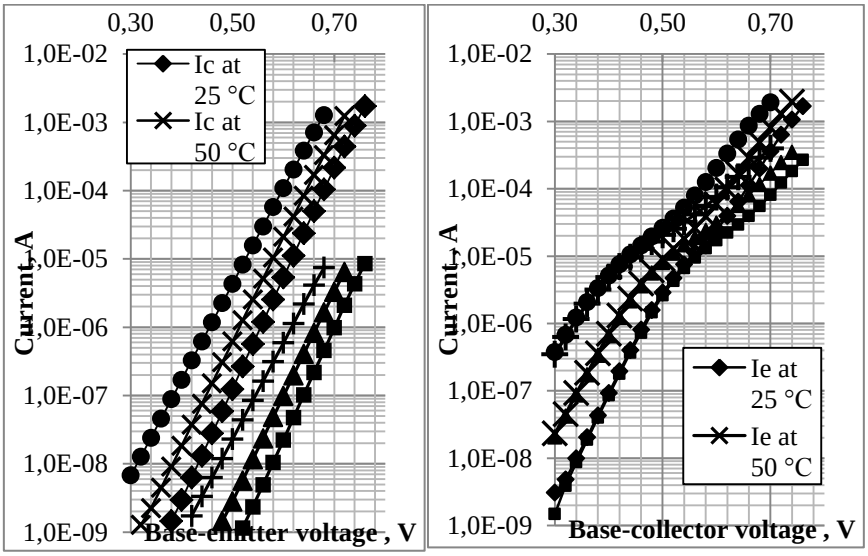

(a) (b)

Figure 3. Hummel plots for the different temperatures (a - normal active mode, b - inverse mode).

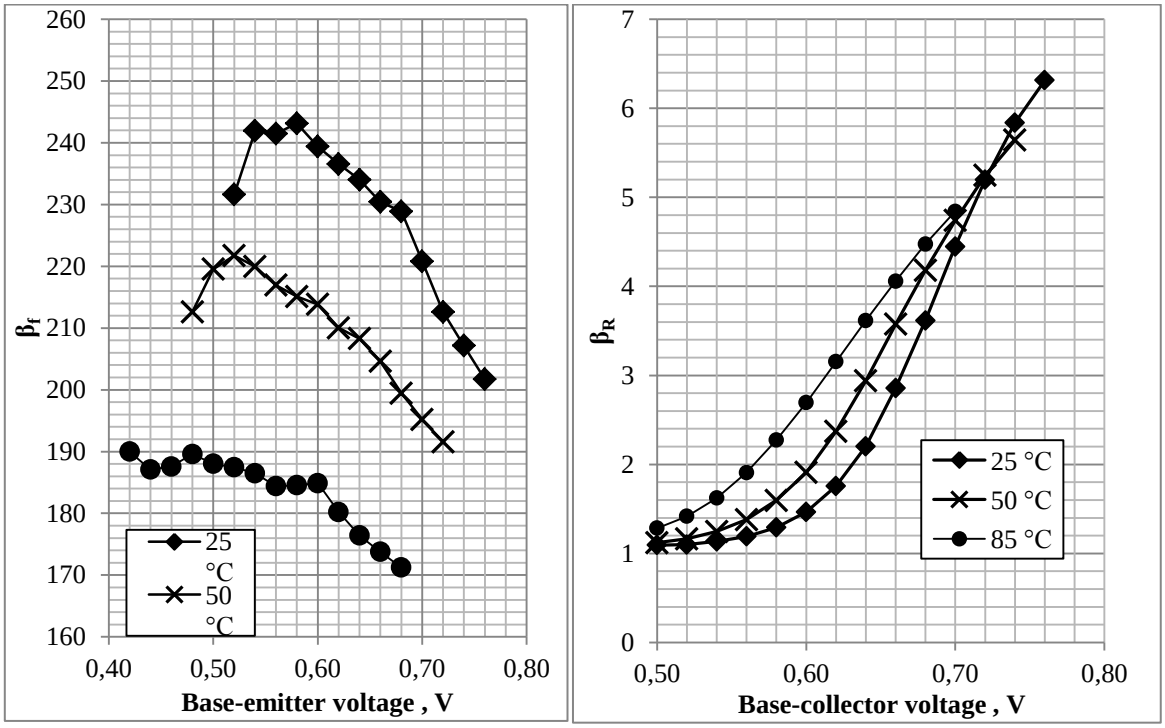

(a) (b)

Figure 4. The dependence of the static gain on the base-emitter voltage (normal mode) (a) and the dependence of the static gain on the base-collector voltage (inverse mode) (b).

Extraction of the model parameters was performed by using the curves presented in Fig.4. Parameters obtained by extraction procedure are shown in Table 1.

Table 1. The parameters of the model SiGe heterojunction bipolar transistor extracted from experimental data.

T, °C	I_s	B_f	I_{se}	n_e
25	$1.0 \cdot 10^{-15}$	243	0	1
50	$2.0 \cdot 10^{-14}$	221	0	1
85	$5.0 \cdot 10^{-13}$	190	0	1

5. Conclusion

This article presents the results of measurements of the current-voltage characteristics of test structures of the SiGe bipolar transistor for different temperatures. The result of parameters extraction of test structures of the SiGe bipolar transistor, which can be used for schematics simulation during high frequency developing process is presented.

6. References

[1] Cressler J D 2005 *IEEE Trans. Nucl. Sci.* **93** 1559
[2] Cressler J D 2005 *Proc. IEEE Bipolar/BiCMOS Circuits and Technol. Meeting*. 248
[3] Cressler J D 2006 *Proc. IEEE Silicon Monolithic Integrated Circuits in RF Systems*. 3