ARCHIVES OF ELECTRICAL ENGINEERING VOL. 63(2), pp. 187-196 (2014)

DOI 10.2478/aee-2014-0015

WTHD minimisation in hybrid multilevel inverter using biogeographical based optimisation

R. KAVITHA, RANI THOTTUNGAL

Department of Electrical and Electronics Engineering
Kumaraguru College of Technology, Coimbatore, India-641049
e-mail: {kavithain2/ranithottungal}@yahoo.com

(Received: 28.08.2013, reveised: 29.01.2014)

Abstract: Harmonic minimisation in hybrid cascaded multilevel inverter involves complex nonlinear transcendental equation with multiple solutions. Hybrid cascaded multilevel can be implemented using reduced switch count when compared to traditional cascaded multilevel inverter topology. In this paper Biogeographical Based Optimisation (BBO) technique is applied to Hybrid multilevel inverter to determine the optimum switching angles with weighted total harmonic distortion (WTHD) as the objective function. Optimisation based on WTHD combines the advantage of both OMTHD (Optimal Minimisation of Total Harmonic Distortion) and SHE (Selective Harmonic Elimination) PWM. WTHD optimisation has the benefit of eliminating the specific lower order harmonics as in SHEPWM and minimisation of THD as in OMTHD. The simulation and experimental results for a 7 level multilevel inverter were presented. The results indicate that WTHD optimization provides both elimination of lower order harmonics and minimisation of Total Harmonic Distortion when compared to conventional OMTHD and SHE PWM. Experimental prototype of a seven level hybrid cascaded multilevel inverter is implemented to verify the simulation results.

Key words: biogeographical based optimisation (BBO), genetic algorithm (GA), bacterial foraging algorithm (BFA), weighted total harmonics distortion (WTHD) optimal minimisation of total harmonic (OMTHD), selective harmonic elimination (SHE)

1. Introduction

Multilevel voltage source inverters are used for medium and high power applications and have drawn tremendous interest in power industries [1, 2]. Among the various topologies of Multilevel inverter [3], the series connected cascaded H-bridge converters is preferred due to the modularity and simplicity of control. The control, quality and performance of the cascaded H bridge inverters can be enhanced by High frequency carrier based PWM techniques and fundamental frequency methods. High frequency carrier based PWM techniques were not able to eliminate the lower order harmonics and also the switching losses are more and the circuit design is complex. Thus the fundamental frequency switching techniques such as selective

Unauthenticated
Download Date | 2/2/17 6:28 PM

harmonics elimination (SHEPWM), optimized harmonic-stepped waveform (OHSW) and optimal minimization of THD (OMTHD) are used for harmonic optimisation [4].

In SHEPWM switching angles are determined so as to eliminate the specific lower order harmonics and maintain desired fundamental voltage [5-7]. SHEPWM employs elimination of the specific lower order harmonics like 5th, 7th and 13th as objective function. OMTHD is a proficient method, by which the switching angles are determined so as to minimize the THD while the desired fundamental component is generated [8].

The main difficulty in SHEPWM method is to solve the non-linear transcendental equation which has the multiple local solutions [9]. Traditionally NR method was used but it has divergence problem and it also requires good initial guess, close to the exact solution patterns. The approach based on mathematical resultant theory to compute the optimum switching angles involves high degree of polynomials (22nd degree) [10-12]. Deriving and solving high degree polynomials is complex and time consuming.

Modern meta-heuristic algorithms like Genetic algorithm [13], simulated annealing [14] and bacterial foraging algorithm (BFA) and Imperialist colony were employed in literature for harmonic optimisation problems in multilevel inverter. The PSO based algorithm is presented for SHEPWM technique [14]. But it has not been extended to WTHD optimisation.

However PSO solutions do not change directly and it is dependent on the velocity which results in indirect solutions. In recently introduced optimisation algorithm BBO [15] the solutions change directly depending upon the immigration rate and emigration rate, the best population is directly obtained via migration from other solutions (islands) which results in faster convergence rate and the less computational time when compared to PSO [16-18].

This paper presents a proficient method of applying BBO technique based weighted total harmonic distortion (WTHD) optimisation which combines the advantages of SHEPWM and OMTHD. Simulation and experimental results for a 7-level cascaded multilevel inverter are presented to show the validity of the proposed algorithm.

2. Hybrid cascaded multilevel inverter

In recent years, asymmetrical multilevel inverters shown in Figure 1 have received increasing attention because it is possible to synthesize voltage waveforms with reduced harmonic content, even using a few series-connected cells. This advantage is achieved by using distinct voltage levels in different cells, which can create more levels in the output voltage and minimize its total harmonic distortion (THD) without increasing the number of switching devices and isolated sources.

In binary multilevel inverter the voltage sources of the successive bridges will be multiples of two. The number of levels produced in binary hybrid multilevel inverter is given by $\mathbf{2^{(n+1)}-1}$. If there are two voltage sources, then the number of levels produced in output is seven ($2^{(2+1)}-1$). The voltage levels are V_{dc}, $2V_{dc}$, $3V_{dc}$, 0, $-V_{dc}$, $-2V_{dc}$, $-3V_{dc}$. Thus to produce seven levels in binary hybrid multilevel inverter only eight switches (two bridges) and

Unauthenticated
Download Date | 2/2/17 6:28 PM

two voltages sources are required, whereas in cascaded multilevel inverter twelve switches (three bridges) and three voltages sources are required.

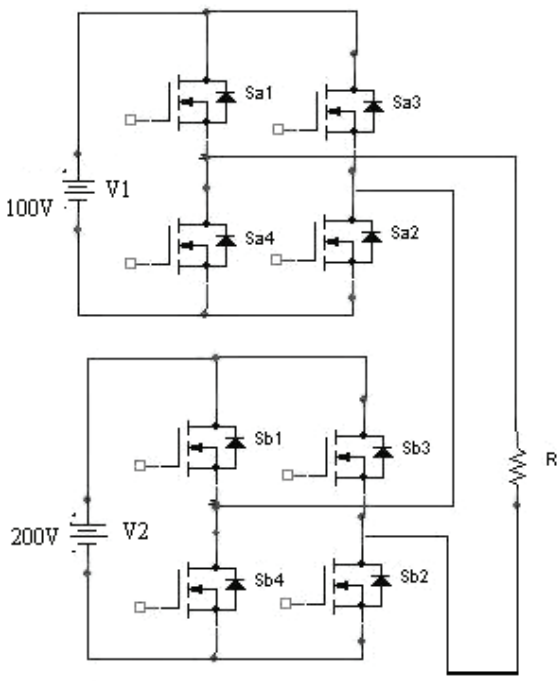

Fig. 1. Topology of a seven level single phase Hybrid cascaded inverter

3. Problem formulation

The Fourier series expansion for a seven level cascaded multilevel inverter is shown in (1):

$$V_{\text{out}}(\omega t) = \sum_{n=1,3,5}^{\alpha} \left(\frac{4Vdc}{n\pi} * K_1 \cos(n\theta_1) + K_2 \cos(n\theta_2) + K_3 \cos(n\theta_3) + \ldots + K_s \cos(n\theta_s) \right) \sin(n\omega t), \quad (1)$$

where $K_i Vdc$ is the ith *dc* voltage, *Vdc* is the nominal *dc* voltage, and the switching angle limits from

$$0 \le \theta_1 \le \theta_2 \le \ldots \theta_s \le \frac{\pi}{2}.$$

To suppress the specified lower order harmonics the series of switching angle $\theta_1 - \theta_s$ is chosen and at the same time, the amplitude of the fundamental is equal to the desired value. The traditional evaluation factor THD is represented by Equation (2). The order of the harmonics is not included in the THD equation.

Unauthenticated
Download Date | 2/2/17 6:28 PM

$$THD = \frac{\sqrt{\sum_{i=2}^{n}[(V_h)]}}{v_1}. \tag{2}$$

The SHEPWM function is given by (3)

$$\text{SHE}P\text{WM} = 100*(b1 - V\text{ref}) + 10*b5 + 10*b7, \tag{3}$$

$$b_n = \frac{4Vdc}{n\pi}\sum_{i=1}^{\alpha}(\cos(n\theta_i)),$$

where n = 1, 5, 7 and b_n is the nth order harmonics. The SHEPWM cost function for various switching angles are shown in Figure 2.

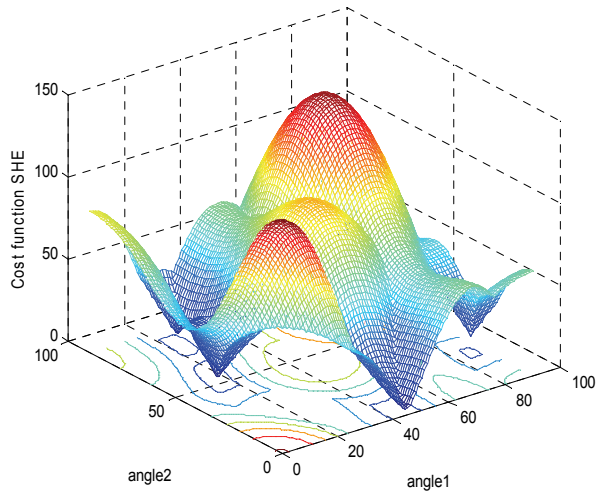

Fig. 2. Cost function for various angles

In WTHD the harmonic voltages are represented as ratio of harmonic order. Thus the THD and lower order harmonics both are minimized .WTHD is represented using the Equation (4),

$$\text{WTHD} = \frac{\sqrt{\sum_{i=2}^{n}\left[\left(\frac{V_i}{i}\right)\right]}}{v_1}, \tag{4}$$

where, V_1 – is the fundamental component, i – is the order of harmonics.

4. Biogeography based optimization

Biogeography Based Optimization (BBO) deals with the study of the distribution of animals and plants. Mathematical models of biogeography mainly deal with the species migra-

Unauthenticated
Download Date | 2/2/17 6:28 PM

tion from one island to another, start of species, and the annihilation of species [19]. The term island is referred as habitat. Habitat suitability index (HSI) indicates the best region for the biological species to survive. The next generation is created in BBO based on the HSI rate, immigration and emigration rate that happens between neighbor habitats. The emigration rate and immigration rate are used to determine best region for immigration and emigration. Addition of new features to low HSI solutions raises the quality of solutions. During this process the results of poor solution take lot of good ones from the neighbor solution.

5. Algorithm

Step 1. Initialise the number of switching angles as Suitability Index Variable SIV = 3 for a seven level inverter. Initialise the BBO parameters habitat modification probability, mutation probability, maximum mutation rate, maximum immigration rate, maximum emigration rate, lower bound for immigration probability for every gene, upper bound for immigration probability per gene, step size for numerical integration, elitism parameter and maximum number of iteration.

Step 2. The habitat is represented by [Θ1 Θ 2 Θ 3]. Each habitat should satisfy the given constraint 0< Θ 1 <90. Each habitat represents decision variable to the given problem.

Step 3. Calculate the HSI for each habitat set of the total habitat set for given emigration rate μ, immigration rate λ. *HSI* represent the minimum WTHD level of the multilevel inverter and is given by

$$\mathrm{WT}HD = \frac{\sqrt{\sum_{i=2}^{n}\left[\left(\frac{V_i}{i}\right)\right]}}{v_1},$$

The switching angle generated should produce waveform with minimum THD. The SIV for HSI is represented as

$$H = SIV = [\theta_1, \theta_2, \theta_3]\ldots$$

Step 4. Based on the WTHD value elite habitats are identified. Elite refers to the habitat sets of inverter output, which gives the lower THD value.

Step 5. probabilistically performs migration operation on those *SIVs* of each non-elite habitat, selected for migration. The procedure to select any *SIV* for migration operation is given in the next step.

Step 6. choose the lower and upper value of immigration Rate λ_{lower} and λ_{upper}. Estimate the value of λ and μ for each habitat set. Compute the habitat and SIV to be chosen for newly generated habitat after migration

Step7. Normalize the immigration rate using the equation

$$\lambda_{\text{scale}} = \lambda_{\text{lower}} + (\lambda_{\text{upper}} - \lambda_{\text{lower}}) * \frac{\lambda(K) - \lambda_{\min}}{\lambda_{\max} - \lambda_{\min}}.$$

Unauthenticated
Download Date | 2/2/17 6:28 PM

Step 8. Mutation operation is performed on the non-elite habitat. In mutation operation replace the selected habitat by random habitat set.

Step 7. Go to the step (3) for the next iteration. This loop can be terminated after a pre-defined number of iterations.

6. Simulation result

To validate the WTHD based optimisation simulation was carried out in MATLAB mfile programming to find out optimised switching angle for a seven level inverter using (i) OMTHD and (ii) WTHD.

6.1. OMTHD based approach

The nominal dc voltage is considered to be 100 V for the 7-level cascaded inverter. The optimized switching angles have been applied to the inverter, and the wave forms are simulated in MATLAB SIMULINK. The simulated switching angle and the corresponding phase and lower order harmonics are presented in Table 1.The minimum phase voltage THD is 12.39%, lower order harmonics is 0.39 for $m = 1$.

Table. 1. Optimum switching angles phase THD and lower order harmonics

θ_1	θ_2	θ_3	THD phase (%)	THD Line (%)	SHE
10.64	23.12	51.88	12.39	8.74	0.39

The SHE results indicate considerable lower order harmonic values and thus it is not completely eliminated.

6.2. WTHD based approach

WTHD is considered as cost function and BBO based optimisation is perfomed.The WTHD optimised switching angle and corresponding WTHD is shown in Figure 3. The lower order harmonics and higher order harmonics with WTHD as objective function is shown in Figures 4 and 5.This method overweighs the previous method as both WTHD and lower order harmonic function is reduced.

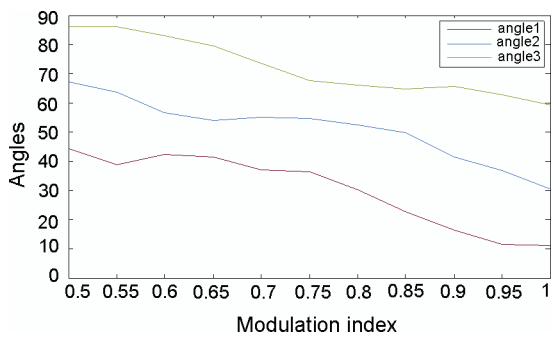

Fig. 3. Switching angles versus Modulation index, M and corresponded cost function for seven level hybrid cascaded multilevel inverter

Unauthenticated
Download Date | 2/2/17 6:28 PM

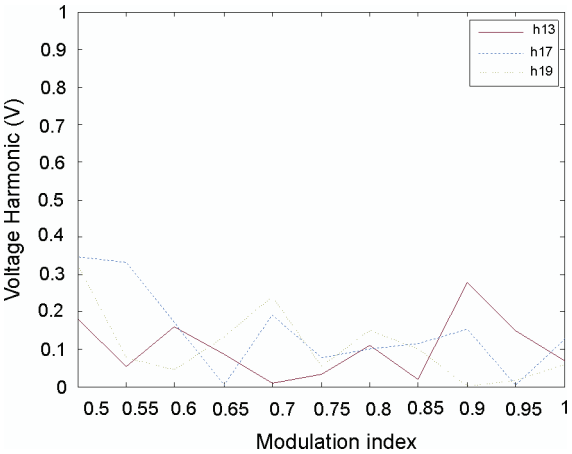

Fig. 4. Modulation index, M and higher order harmonics h13, h17 and h19 for seven level hybrid cascaded multilevel inverter in WTHD approach

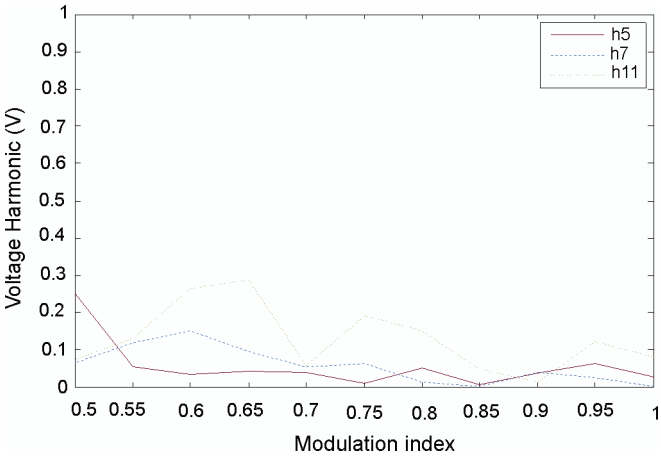

Fig. 5. Modulation index, M and lower order harmonics h5, h7 and h11 for seven level hybrid cascaded multilevel inverter in WTHD approach

Table. 2. Optimum switching angles, WTHD and lower order harmonics

m	1	2	3	h1	h5	h7	h11	h13	WTHD	SHE	THD(%)
1	11.017	30.353	58.956	3.0051	0.028132	0.00266	0.080752	0.069689	**1.237343**	**0.181233**	7.712024
0.95	11.522	36.793	62.791	2.9993	0.062219	0.024586	0.11993	0.14926	**1.362618**	**0.355995**	8.489397
0.9	16.1	41.484	65.623	3.003	0.0358	0.04046	0.014063	0.27808	**1.863873**	**0.368403**	11.61105
0.85	22.689	49.597	64.627	2.9948	0.008188	0.000181	0.048577	0.020097	**1.349426**	**0.077042**	8.413721
0.8	30.039	52.287	65.843	3.0027	0.050161	0.013234	0.15183	0.11089	**1.636008**	**0.326115**	10.19314
0.75	36.061	54.59	67.397	3.0085	0.009555	0.061448	0.1915	0.033031	**1.593036**	**0.295534**	9.924152
0.7	36.92	55.257	73.466	3.0084	0.038025	0.05419	0.057599	0.010158	**1.971691**	**0.159972**	12.29104
0.65	41.407	53.708	79.287	2.9927	0.04376	0.093781	0.28704	0.087626	**2.04089**	**0.512207**	12.70873
0.6	42.172	56.422	83.072	3.0024	0.034046	0.15052	0.26503	0.16042	**2.54786**	**0.610016**	15.87446
0.55	38.822	63.54	85.944	2.9988	0.053907	0.11704	0.13065	0.052735	**2.564348**	**0.354332**	15.98559
0.5	44.077	67.014	85.944	3.004	0.25044	0.065344	0.073677	0.18001	**3.295017**	**0.569471**	20.5422

Unauthenticated
Download Date | 2/2/17 6:28 PM

For the same fundamental component, the WTHD minimization approach is applied and the switching angles are given in the Table 2. The value of the WTHD is 1.34%, lower order harmonics is 0.07. In this process, if the SHE lower order harmonics decreases then the WTHD also decreases. This shows considerable reduction in lower order harmonics when compared to OMTHD.

a)

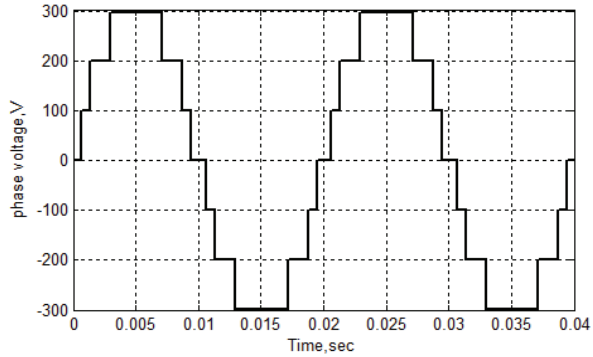

b)

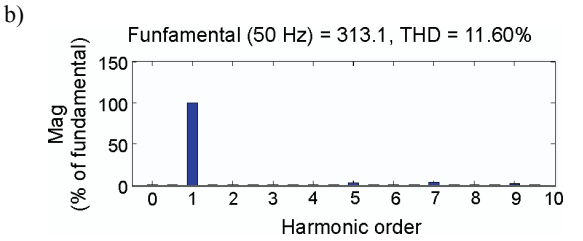

Fig. 6. a) Simulation results of a 7-level multilevel inverter for output phase voltage; b) Simulation results of a 7-level multilevel inverter, FFT analysis for phase voltage

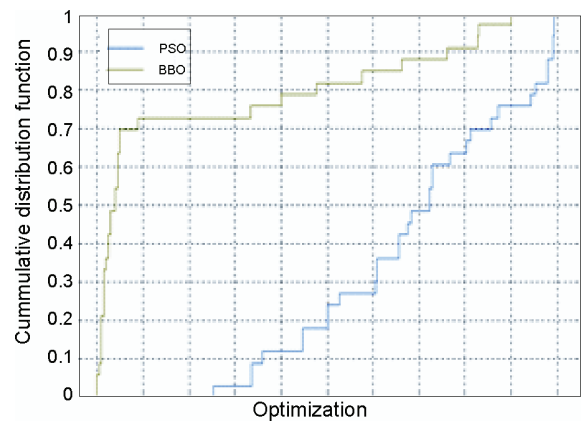

Fig. 7. CDF plot – comparison between PSO and BBO

The 7-level cascaded inverter and the corresponding FFT analysis is shown in the Figure 6, the THD value for 7-level is 11.6. The CDF plot for the convergence of BBO and PSO at different runs is shown in Figure 7.The graph indicates that convergence of BBO is faster than PSO.

Unauthenticated
Download Date | 2/2/17 6:28 PM

7. Experimental result

Figure 8 shows an experimental hardware prototype and the oscillogram of voltage waveform for modulation index 0.85 for WTHD based approach. The oscillogram waveform and the spectrum is shown in Figure 9 and 10. THD is measured using power analyser and the value of phase THD is found to be 12.1% experimentally.

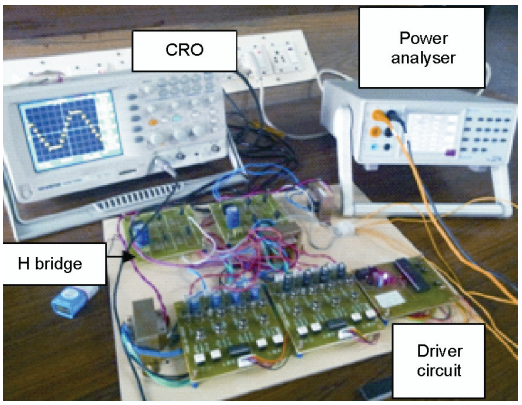

Fig. 8. The hardware prototype

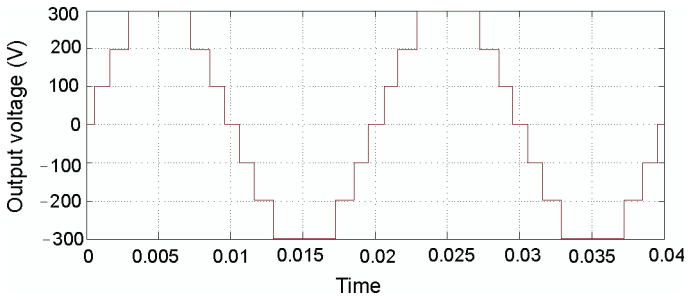

Fig. 9. The oscillogram of voltage waveform

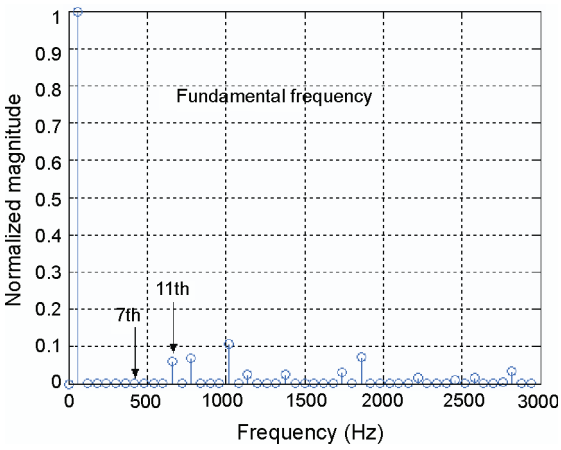

Fig. 10. Normalized FFT analysis of the phase voltage

Unauthenticated
Download Date | 2/2/17 6:28 PM

8. Conclusion

The BBO based optimisation has been employed to solve Weighted THD based optimisation problem with equal dc sources in hybrid cascaded multilevel inverters. This method is able to find the optimum switching angles optimising both WTHD and lower order harmonic. The proposed method has the advantage of reducing both WTHD and lower order harmonics with faster convergence rate. Seven level Hybrid multilevel inverter has been implemented using 8 switches where as traditional cascaded multilevel topology requires 12 switches. The simulation results for 7-level cascaded H-bridge inverter and FFT analysis was presented. The experimental prototype was constructed and tested to verify the simulation results.

References

[1] Tolbert L.M., Peng F.Z., Habetler T.G., *Multilevel converter for large electric drives*. IEEE Trans. Ind. Appl. 35(1): 36-44 (1999).

[2] Wang J., Peng F.Z., *Unified power flow controller using the cascade multilevel inverter*. IEEE Trans. Power Electron. 19(4): 1077-1084 (2004).

[3] Rodríguez J., Lai J., Peng F.Z., *Multilevel inverters: A survey of topologies, controls and applications*. IEEE Trans. Ind. Electron. 49(4): 724-738 (2002).

[4] Manjrekar M., Venkataramanan G., *Advanced topologies and modulation strategies for multilevel converters*. Proc. IEEE Power Electron Spec. Conf., Baveno, Italy, Jun. pp. 1013-1018 (1996).

[5] Li L., Czarkowski D., Liu Y., Pillay P., *Multilevel selective harmonic elimination PWM technique in series-connected voltage converters*. IEEE Trans. Ind. Appl. 36(1): 160-170 (2000).

[6] Shyu F.S., Lai Y.S., *Virtual stage pulse-width modulation technique for multilevel inverter/ converter*. IEEE Trans. Power Electron. 17(3): 332-341 (2002).

[7] Dahidah M.S.A., Agelidis V.G., *Selective harmonic elimination PWM control for cascaded multilevel voltage source converters: A generalized formula*. IEEE Trans. Power Electron. 23(4): 1620-1630 (2008).

[8] Liu Y., Hong H., Huang A.Q., *Real-time calculation of switching angles minimizing THD for multilevel inverters with step modulation*. IEEE Trans. Ind. Electron. 56(2): 285-293 (2009).

[9] Chiasson J.N., Tolbert L.M., McKenzie K.J., Zhong D., *Elimination of harmonics in a multilevel converter using the theory of symmetric polynomials and resultants*. IEEE Trans. Control Syst. Technol. 13(2): 216-223 (2005).

[10] Chiasson J.N., Tolbert L.M., Du Z., McKenzie K.J., *The use of power sums to solve the harmonic elimination equations for multilevel converters.* Eur. Power Electron. Drives J. 15(1): 19-27 (2005).

[11] McKenzie K.J., *Eliminating harmonics in a cascaded H-bridges multilevel inverter using resultant theory, symmetric polynomials, and power sums.* M.Sc. thesis, Univ. Tennessee, Chattanooga (2004).

[12] Ozpineci B., Tolbert L.M., Chiasson J.N., *Harmonic optimization of multilevel converters using genetic algorithms*. IEEE Power Electron. Lett. 3(3): 92-95 (2005).

[13] Kavitha R., Rani Thottungal Dr., *Implementation of novel low cost Multilevel DC link inverter with harmonic profile improvement.* Asian Power Electronics Journal 2(3): 158-162 (2008).

[14] Taghizadeh H., Tarafdar M. Hagh, *Harmonic elimination of multilevel inverters using particle swarm optimization.* Proc. IEEE-ISIE, Cambridge, U.K., pp: 393-397 (2008).

[15] Simon D., *Biogeography-based optimization.* IEEE Trans. Evol. Comput. 12(6): 702-713 (2008).

[16] Singh U., Kumar H., Kamal T.S. *Design of Yagi-Uda antenna using biogeography based optimization*. IEEE Trans. Antennas Propagat. 58(10): 3375-3379 (2010).

[17] Bhattacharya A., Chattopadhyay P.K., *Biogeography-based optimization for different economic load dispatch problems*. IEEE Trans. Power Syst. 25(2): 1064-1077 (2010).

[18] Bansal, A.K. Kumar R., Gupta R.A., *Economic Analysis and Power Management of a Small Autonomous Hybrid Power System (SAHPS) Using Biogeography Based Optimization (BBO) Algorithm*. IEEE Transactions On Smart Grid 4(1): 638-648 (2013).

Unauthenticated
Download Date | 2/2/17 6:28 PM