Improvement to Pipeline Compressor Engine Reliability through Retrofit Micro-Pilot Ignition System – PHASE III

ANNUAL TECHNICAL PROGRESS REPORT

For the Period:

9/19/03 – 12/31/2004

Prepared by:

Scott Chase
Daniel Olsen, PhD.
Ted Bestor, P.E.

Submitted:

March, 2005

DOE Award Number:

DE-FC26-01NT41162

Submitted by:

Colorado State University
Mechanical Engineering Department
Engines & Energy Conversion Laboratory
Fort Collins, CO 80523-1374

DISCLAIMER

"This report was prepared as an account of work sponsored by an agency of the United States Government. Neither the United States Government nor any agency thereof, nor any of their employees, makes any warranty, express or implied, or assumes any legal liability or responsibility for the accuracy, completeness, or usefulness of any information, apparatus, product, or process disclosed, or represents that its use would not infringe privately owned rights. Reference herein to any specific commercial product, process, or service by trade name, trademark, manufacturer, or otherwise does not necessarily constitute or imply its endorsement, recommendation, or favoring by the United States Government or any agency thereof. The views and opinions of authors expressed herein do not necessarily state or reflect those of the United States Government or any agency thereof."

ABSTRACT

This report documents the third year's effort towards a 3-year program conducted by the Engines & Energy Conversion Laboratory (EECL) at Colorado State University (CSU) to develop micropilot ignition systems for existing pipeline compressor engines.

Research activities for the overall program were conducted with the understanding that the efforts are to result in a commercial product to capture and disseminate the efficiency and environmental benefits of this new technology. Commercially-available fuel injection products were identified and applied to the program where appropriate. This approach will minimize the overall time-to-market requirements, while meeting performance and cost criteria.

Two earlier phases of development precede this report. The objective for Phase I was to demonstrate the feasibility of retrofit micropilot ignition (RMI) systems for large bore, slow speed engines operating at low compression ratios under laboratory conditions at the EECL[1]. The objective for Phase II was to further develop and optimize the micropilot ignition system at the EECL for large bore, slow speed engines operating at low compression ratios[2].

These laboratory results were enhanced, then verified via a field demonstration project during Phase III of the Micropilot Ignition program. An Implementation Team of qualified engine retrofit service providers was assembled to install the retrofit micropilot ignition system for an engine operated by El Paso Pipeline Group at a compressor station near Window Rock, Arizona. Testing of this demonstration unit showed that the same benefits identified by laboratory testing at CSU, i.e., reduced fuel consumption and exhaust emissions (NOx, THC, CO, and CH2O).

Installation efforts at Window Rock were completed towards the end of the budget period, which did not leave sufficient time to complete the durability testing. These efforts are ongoing, with funding provided by El Paso Pipeline Group, and the results will be documented in a report.

Commercialization of the retrofit micropilot ignition (RMI) technology is awaiting a "market pull", which is expected to materialize as the results of the field demonstration become known and accepted. The Implementation Team, comprised of Woodward Governor Company, Enginuity LLC, Hoerbiger Corporation of America, and DigiCon Inc., has direct experience with the technology development and implementation, and stands ready to promote and commercialize the RMI system.

[1] "Improvement to Pipeline Compressor Engine Reliability Through Micro-Pilot Ignition System – Phase I", Annual Technical Report, DOE Award DE-FC26-01NT41162, www.osti.gov/servlets/purl/823051-m75LcK/native/
[2] "Improvement to Pipeline Compressor Engine Reliability Through Micro-Pilot Ignition System – Phase II", Annual Technical Report, DOE Award DE-FC26-01NT41162, www.osti.gov/servlets/purl/825849-oVYjOq/native/

TABLE OF CONTENTS

INTRODUCTION 1
EXECUTIVE SUMMARY 1
EXPERIMENTAL 2
RESULTS AND DISCUSSION 2
Account of Progress - Phase III: Field Testing and Production Engineering 2
Task 3.1: Research Management Plan/ NEPA 2
Task 3.2: Identification of Field Test Sites 2
Task 3.3: Manufacturing of Field Test Units 3
Task 3.4: Field Test 5
Task 3.5: Durability Testing 7
Task 3.6: Revision of Production Specifications 8
Task 3.7: Finalize and Release Design for Production 8
Phase III - Significant Accomplishments 8
Problems Encountered 8
Publications and Presentations 9
CONCLUSIONS 9

APPENDICES

Appendix 13: Research Management Plan – Phase II
Appendix 14: Compression Ratio Evaluation

INTRODUCTION

This report documents the efforts for the third year of the 3-year research program conducted by the Engines & Energy Conversion Laboratory (EECL) at Colorado State. This research was in support of DOE's Natural Gas Infrastructure Reliability program.

The objective of overall program is to increase the operational integrity, to increase fuel efficiency, and to reduce the environmental impact of two-stroke, natural gas, compressor engines. In total, the U. S. pipeline industry has approximately 8,000 reciprocating engines installed for natural gas compression with a capacity of 7 gigawatts (9.4 million horsepower). The overwhelming majority of these engines are low compression ratio, slow speed, large bore, low brake-mean-effective-pressure (bmep), 2-stroke, gas engines. Almost all of these engines are between 20 and 50 years old, and they represent a critical part of the natural gas pipeline infrastructure. To replace any significant fraction of this asset base would cost billions of dollars.

EXECUTIVE SUMMARY

Research activities for the 3-year program were conducted with the understanding that the efforts are expected to result in a commercial product to capture and disseminate the efficiency and environmental benefits of this new technology. Commercially-available fuel injection products were identified and applied to the program where appropriate. Modifications to existing engine components were kept to a minimum. This approach will minimize the overall time-to-market requirements, while meeting performance and cost criteria.

Two earlier phases of development precede this report. The objective for Phase I was to demonstrate the feasibility of retrofit micropilot ignition (RMI) systems for large bore, slow speed engines operating at low compression ratios under laboratory conditions at the EECL. The objective for Phase II was to further develop and optimize the micropilot ignition system at the EECL for large bore, slow speed engines operating at low compression ratios.

For Phase III of the RMI program, these laboratory results were enhanced, then verified via a field demonstration project. An Implementation Team of qualified engine retrofit service providers was assembled to install the retrofit micropilot ignition system for an engine operated by El Paso Pipeline Group at a compressor station near Window Rock, Arizona. Testing of this demonstration unit showed that the same benefits identified by laboratory testing at CSU, i.e., reduced fuel consumption and exhaust emissions (NOx, THC, CO, and CH2O).

Significant accomplishments for Phase III include:

1. Design, installation, and testing of a 10-cylinder RMI prototype at an operating pipeline compressor station.
2. Initiation of a 6-month durability test.
3. 600+ hours of run time for the field demonstration unit at the time of this report.
4. In conjunction with our commercialization partner, the Woodward Governor Company, established relationships with three (3) field installation contractors to migrate the RMI technology to field demonstration sites.

EXPERIMENTAL

Testing activities for Phase III dealt primarily with the field demonstration unit. The engine selected was a Worthington SUTC-10 operated by El Paso Pipeline Group near Window Rock, Arizona. Emissions data was recorded using the EECL's mobile emissions laboratory equipped with dedicated analyzers for criteria pollutants and a FTIR analyzer for hazardous air pollutants. Data for engine combustion analysis was recorded by El Paso personnel using commercial instrumentation.

RESULTS AND DISCUSSION

Account of Progress - Phase III: Field Testing and Production Engineering

The overall, 3-year program was segmented into manageable, step-wise activities. These individual tasks and original timeline are shown below, followed by a description of the results and deliverable produced for each task.

Task 3.1: Research Management Plan/ NEPA

The EECL developed a work breakdown structure and supporting narrative, similar to the first two phases, which concisely addressed the overall project as set forth in the agreement. Following the completion of Phase II, the Research Management Plan was updated to reflect the status of the project and the understanding that was gained. A draft report that provided the environmental information necessary to satisfy requirements of the National Environmental Policy Act (NEPA) was also prepared and submitted to NETL.

Task 3.2: Identification of Field Test Sites

This was an effort to select field test sites that are most representative of frequent compressor operation and that can be well supported. Woodward and the PRCI/GRI Compressor & Pump Station Technical Committee (CAPSTC) have worked closely in the past on field tests for electronic fuel injection and high-pressure fuel injection so there was significant experience to guide the field test process. The CAPSTC worked with member companies to identify suitable field sites and to secure the required commitment of resources from the host company(s) in order to support the field tests. The roles in the field test were as follows:

CAPSTC- primary responsibility for leading industry efforts to identify the most appropriate field site(s), to secure the commitment and participation of the host companies, and to ensure that the field test is representative of normal field conditions.

Woodward - produced the hardware required for the field test and provided support for the hardware as needed during the field test. Woodward worked closely with the Vendor Team to ensure successful management of the field test.

CSU-The EECL continued to serve as project manager during the key field test phase. Technical efforts were scaled-back during the fabrication and installation of the field test hardware. The EECL assisted with the startup/shakedown of the RMI system at the field sites, and in analyzing the field data.

Host Company- provided an engine and operational support for the field test program. Two field test sites were anticipated at the beginning of the 3-year program. The host company provided operation personnel and obtained their support for the field test program. It was essential that the engine at the host site be in excellent operating condition during the baseline test and during subsequent testing of the new technology.

The above criteria were applied to secure two (2) host sites, both owned by El Paso Natural Gas as located on Figure 32. The first site involved the retrofit of a Worthington SUTC-10 (Unit 4A), 2500 HP, at Window Rock, Arizona. Blanco, New Mexico, was to serve as the second site, and the engine of interest was a Cooper-Bessemer GMV-10TF. For reasons discussed later, the demonstration project at Blanco was not performed.

Figure 1 - Field Demonstration Sites

Task 3.3: Manufacturing of Field Test Units

The fuel system hardware was provided by Woodward and the Vendor Team members for the field test at Window Rock. Woodward furnished the electronics, the fuel injector/nozzle/ adapter assemblies, and the fuel pump/ supply system. Hoerbiger Corporation of America (HCA) provided the wiring harness, fuel rail, and fuel supply/ return piping. Enginuity, LLC (ELLC) designed and fabricated the control system and injector driver systems. DigiCon, Inc. sized the fuel supply system and other system components per Figure 2. CSU personnel fabricated the pump module at the EECL and shipped the unit to the site. A special tool for installing the injector adapter within the existing spark plug hole was designed by CSU personnel. Additional design drawings and material lists are provided in Appendix 3.3.

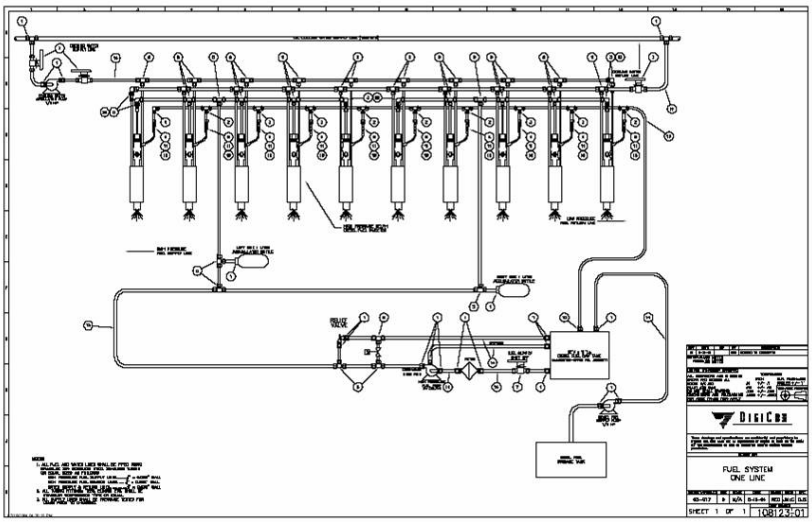

Figure 2 - Schematic of RMI Components

The RMI system was a relatively straight-forward installation, as most issues were addressed during the laboratory demonstration phases (I and II) at the EECL. The RMI system components, shown in Figures 3 - 6, were installed in July and initially operated on August 26. Hoerbiger Corporation of America was responsible for the field installation phase. Initial performance testing was conducted September 7-9, as described for Task 3.4.

Figure 3 - SUTC power Cylinders before RMI

Figure 4 - SUTC power Cylinders after RMI

Figure 5 - Pump Cart & Diesel Tank

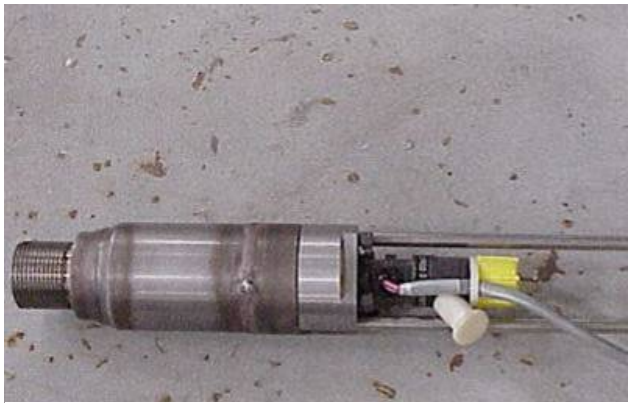

Figure 6 - Injector & Adapter

It is generally accepted that pipeline engines will need to retain their spark ignition systems for startup, until sufficient engine heat is developed for compression ignition of the pilot fuel, at which time the spark ignition system can be deactivated. Automatic controls were provided for this function, as well as for the pilot fuel injection pressure, timing and duration. Enginuity, LLC was responsible for commissioning the control system. The first changeover to micro-pilot ignition was relatively problem free with all on-engine components functioning properly. Some necessary diesel transfer system enhancements were identified, which limited the time available for performance testing and system optimization. These enhancements, to allow automatic filling of the pump module from the 1,000 gallon diesel storage tank located outside the engine room, were implemented in early October and Unit 4A was restarted with micro-pilot ignition operational.

Unit 4A operated from October 5 until October 29 on the retrofit micro-pilot ignition system. By this time, some of the injectors experienced fouling from a varnish-like residue created by overheating of the diesel fuel. The RMI injectors were changed-out on November 02, 2004 and the emissions and performance tests were repeated (see Task 3.4). Several of the replacement injectors quickly fouled and the RMI system was deactivated pending a long-term solution of the fouling problem. A new injector adapter with enhanced water cooling has since been designed. Due to interface issues between the micro-pilot ignition system controls and the existing engine control system, the spark ignition system remained operational for one of the two ignition points, but had little effect on the combustion processes.

The RMI system for field demonstration at Blanco, NM was not fabricated, installed or tested due to operational limitations of the Cooper-Bessemer GMV engines at this site. The technology plan for the Blanco site included engine lube oil as the pilot fuel, instead of diesel, due to the low combustion air boost levels available. EECL personnel conducted a single-cylinder injection/ ignition test at Blanco in August, 2004, but were unable to achieve auto-ignition of the lube oil fuel due to low compression pressures and temperatures. A high-compression ratio head was installed on one cylinder to mitigate these conditions, but mechanical interferences were encountered. It was concluded that all ten (10) power pistons would need to be removed and machined to reduce height in order to accommodate the high-compression ratio heads. Since the engine would need substantial modifications to be configured for the RMI system, an outcome that is not consistent with the objectives of this program, and further development efforts were discontinued for the Blanco, NM site.

Task 3.4: Field Test

Management of a successful field test is a significant and complex undertaking. There were multiple parties involved who must be coordinated, training which must be conducted for field personnel, monitoring of routine operation, setup/startup and system optimization, and gathering of high quality performance data. Significant components of the field test plan were prepared by CSU, Woodward and the host company. A comprehensive field test-planning document was produced to guide the field test (Appendix 3.4). Preparation of the field test-planning document commenced at the beginning of Phase III and was in place to guide the field test efforts.

The pre-modification, or baseline, testing was performed by CSU personnel in June, 2004 using the EECL's mobile emissions laboratory. After installation of the field test hardware at Window Rock, Woodward and CSU assisted the Vendor Team through the startup and shakedown processes. The systems were then operated for a few days in order to "stabilize" and to gather operational experience. Once the field operations personnel were familiar with the equipment, a performance was scheduled. During the performance test, EECL personnel were on-site with a mobile emissions laboratory to monitor the performance of the engine with and without the pilot ignition system.

The data obtained during the September 7-9 testing at Window Rock validates the desired trends for RMI when compared to spark ignition, although system optimization and additional testing must be conducted. Figure 7 illustrates that combustion stability with RMI is about the same as with spark ignition. Improvements are expected after the injection system is optimized, and performance at leaner mixtures and part-load operating modes is expected to improve with RMI.

Fuel consumption (Figure 8) was improved from 1-3%, which is significant for pipeline engines. NOx and CO emissions are slightly higher, as shown in Figures 9 and 10, but reductions in these emissions during lean mixture (high turbo boost levels) and part-load operating modes appear likely. Across-the-board emissions reductions may be achieved through optimization.

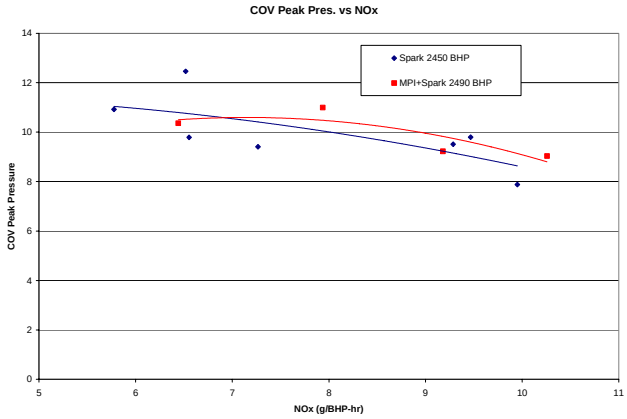

Figure 7 - Combustion Data: 1st Round

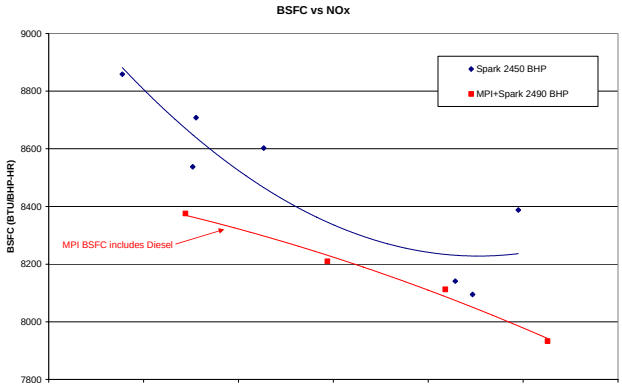

Figure 8 - BSFC Data: 1st Round

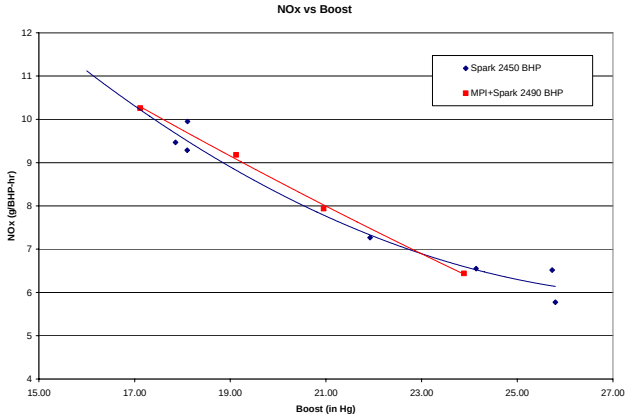

Figure 9 - NOx Data: 1st Round

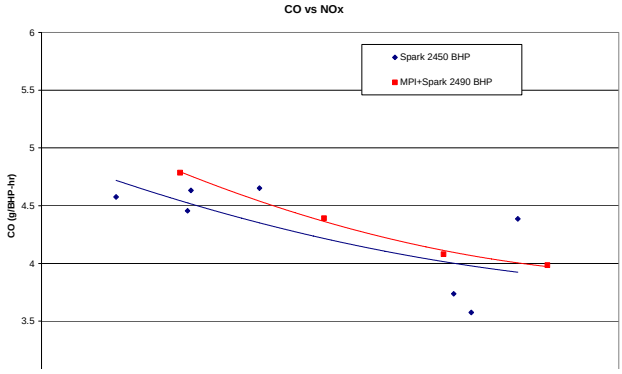

Figure 10 - CO Data: 1st Round

Figures 11-14 depict data obtained from the Window Rock site in early November, 2004. Compared to the spark-ignition baseline tests made before the RMI installation, combustion stability improved significantly (Figure 11), as did BSFC (Figure 12) and CO (Figure 14). NOx production (Figure 13) was slightly higher, although this can probably be reduced through optimization techniques that are scheduled during future durability test runs.

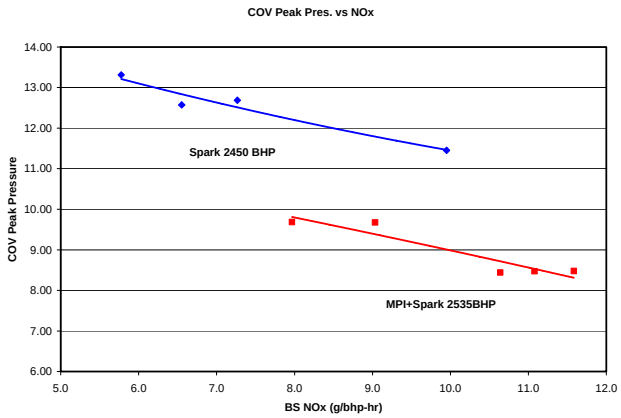

Figure 11 - Combustion Data: 2nd Round

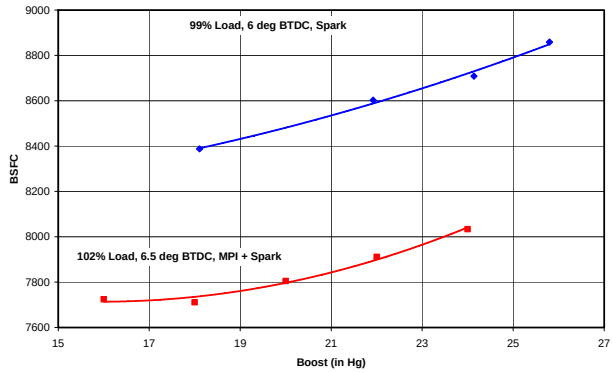

Figure 12 - BSFC data: 2nd Round

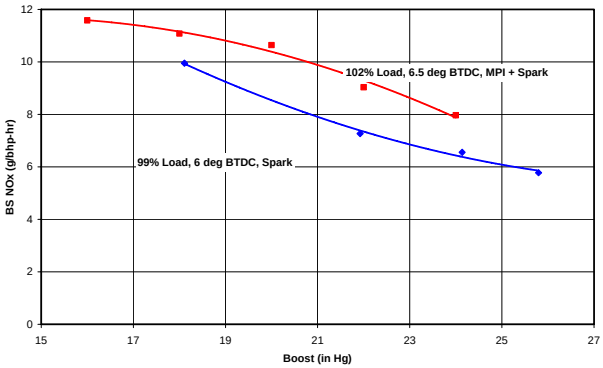

Figure 13 - NOx Data: 2nd Round

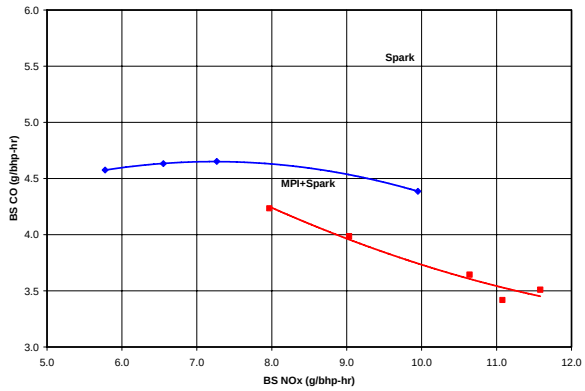

Figure 14 - CO Data: 2nd Round

Task 3.5: Durability Testing

The RMI injectors were changed-out on November 02, 2004 and the emissions and performance tests were repeated. It was originally anticipated that six months of operating history would be accumulated by the end of the Phase III project. Data that will be monitored by CSU during the durability testing included overall fuel consumption, pilot fuel consumption, any history of mechanical problems, and weekly reports on engine stability. Typically, operators of large compressor engines monitor the engine operation periodically. For the durability testing we asked that this be performed on a weekly basis and that the pressure-time histories in each combustion cylinder be recorded and included as part of the data set during the durability test.

Installation efforts at Window Rock were completed towards the end of the budget period, which did not leave sufficient time to complete the nozzle cooling modifications and subsequent

durability testing. These efforts are ongoing, with funding provided by El Paso Pipeline Group, and the results will be documented in a report to be issued at the conclusion of these efforts.

Task 3.6: Revision of Production Specifications

Based on the results of the performance analysis and durability testing, Woodward and the other Vendor Team members will make changes in the system design as needed.

Task 3.7: Finalize and Release Design for Production

Based on the revised specifications from the previous task Woodward will modify the design to produce a final design package that can be used in subsequent commercialization efforts. This will require appropriate attention to electromagnetic interference (EMI) and flammability classification of the injection equipment and electronic drivers.

Phase III - Significant Accomplishments

1. Design, installation, and testing of a 10-cylinder RMI prototype at an operating pipeline compressor station.
2. Initiation of a 6-month durability test.
3. 600+ hours of run time for the field demonstration unit at the time of this report.
4. In conjunction with our commercialization partner, the Woodward Governor Company, established relationships with three (3) field installation contractors to migrate the RMI technology to field demonstration sites.

Problems Encountered

Very few problems arose during the field phase and all were corrected without substantial difficulty. These included:

1. Pilot fuel injector fouling. After engine operation with the RMI system at Window Rock, some injectors failed to operate after 3.5 weeks of run-time. It was determined that the injectors became “varnished” with diesel fuel residue as a result of high temperature operation. This problem will be corrected with an improved, water-cooled adapter specific to the Worthington SUTC-10 engine prior to continuation of the durability evaluation.
2. Working on Navajo Land: Window Rock station is located on land governed by the Navajo Nation. State and local government agencies did not have jurisdiction, and permission to perform the modifications required substantial communication and coordination efforts.
3. Special Installation Tooling: due to the configuration of the Worthington SUTC power cylinder head (which is about 18” high), the injector adapter assembly had to be fed down a long access tube of 1.5” diameter. The special tool designed to secure the adapter in the spark plug hole had to be redesigned twice in order to be reliable and repeatable.

Publications and Presentations

A Technical Progress report for Phase II of the RMI program was presented to NETL and GMRC Gas Machinery Conference attendees on October 3, 2004.

A technical paper for the 3-year program is scheduled for presentation at the Natural Gas Technologies 2005 Conference sponsored by DOE and the Gas Technology Institute, January 31, 2005.

CONCLUSIONS

Phase III of the Retrofit Micropilot Ignition System was successful in demonstrating:

1. Retrofit Micropilot Ignition systems are technically capable of delivering efficiency and emissions improvements when compared to spark ignition systems.
2. Appropriate hardware and control system components are commercially available now, providing an expeditious path to market.
3. Design, installation, and testing of a 10-cylinder RMI prototype at an operating pipeline compressor station. The technology can be applied to various types of pipeline compressor engines on a retrofit basis.
4. In general, the engine operated more stable with fewer misfires and partial combustion events when compared to spark-ignition operation.
5. The engine had, in general, a wider range of operation.
6. Initiation of a 6-month durability test.
7. 600+ hours of run time for the field demonstration unit at the time of this report.
8. In conjunction with our commercialization partner, the Woodward Governor Company, established relationships with three (3) field installation contractors to migrate the RMI technology to field demonstration sites

APPENDIX 3.3

"Retrofit Micropilot Ignition System Design Data for a Worthington SUTC-10"

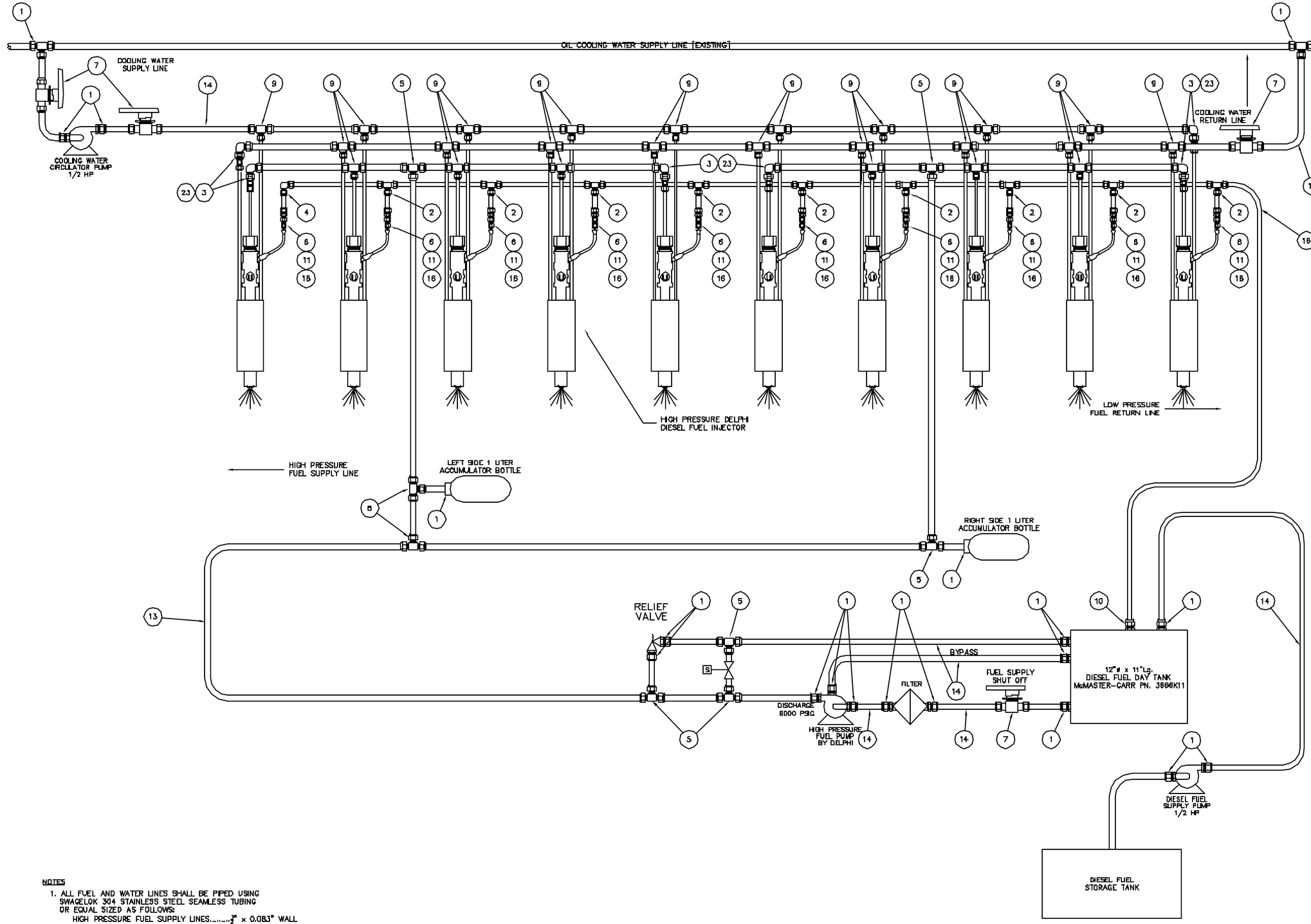

NOTES

1. ALL FUEL AND WATER LINES SHALL BE PIPED USING SWAGELOK 304 STAINLESS STEEL SEAMLESS TUBING OR EQUAL SIZED AS FOLLOWS:
   HIGH PRESSURE FUEL SUPPLY LINES.....3/8" x 0.083" WALL
   HIGH PRESSURE FUEL BRANCH LINES.....1/4" x 0.065" WALL
   WATER SUPPLY & RETURN LINES.....3/8" x 0.035" WALL
2. ALL TUBING FITTINGS: TEES, ELBOWS ETC. SHALL BE SWAGELOK COMPRESSION TYPE OR EQUAL.
3. ALL SUPPLY LINES SHALL BE PRESSURE TESTED FOR LEAKS PRIOR TO CHARGING.

REV	DATE	REF	BY	DESCRIPTION
01	6-21-04		WED	REVISED TO COMMENTS

MATERIAL: AS NOTED
FINISH: AS NOTED

UNLESS OTHERWISE SPECIFIED
ALL DIMENSIONS ARE IN INCHES
BREAK AND DEBURR ALL
EDGES R/C.010
FILLET .010 MAX
DO NOT SCALE DRAWING
DIMENSIONING AND TOLERANCING PER ASME Y14.5M 1984 APPLY

TOLERANCES	INCH
.X	+/- .1
.XX	+/- .01
.XXX	+/- .002
.XXXX	+/- .0003

SUR. FINISH=125
ANGLES +/- 1°
THIRD ANGLE PROJECTION

DIGICON

These drawings and specifications are confidential and proprietary to Digicon Inc. and shall not be reproduced or copied or used as the basis for the manufacture or sale of apparatus and/or devices without permission.

DESCRIPTION

FUEL SYSTEM ONE LINE

PROJECT/PRODUCT	SIZE	SCALE	DATE	DRAWN	ENGR	MFG
03-017	D	N/A	6-19-04	WED	JMcC	DJS

SHEET 1 OF 1

PART NUMBER 108123-01

07/16/2004 04:20:13 PM

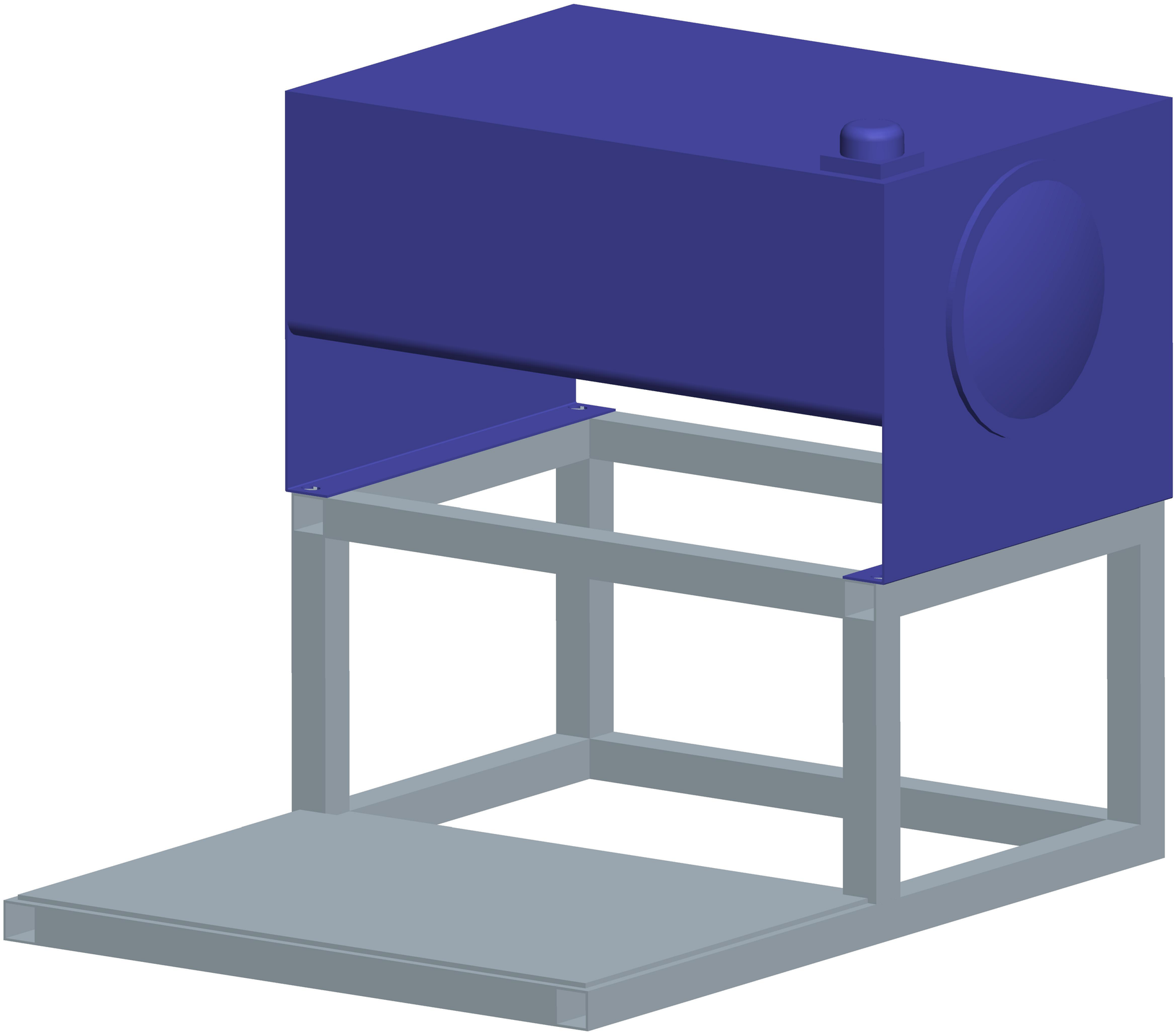

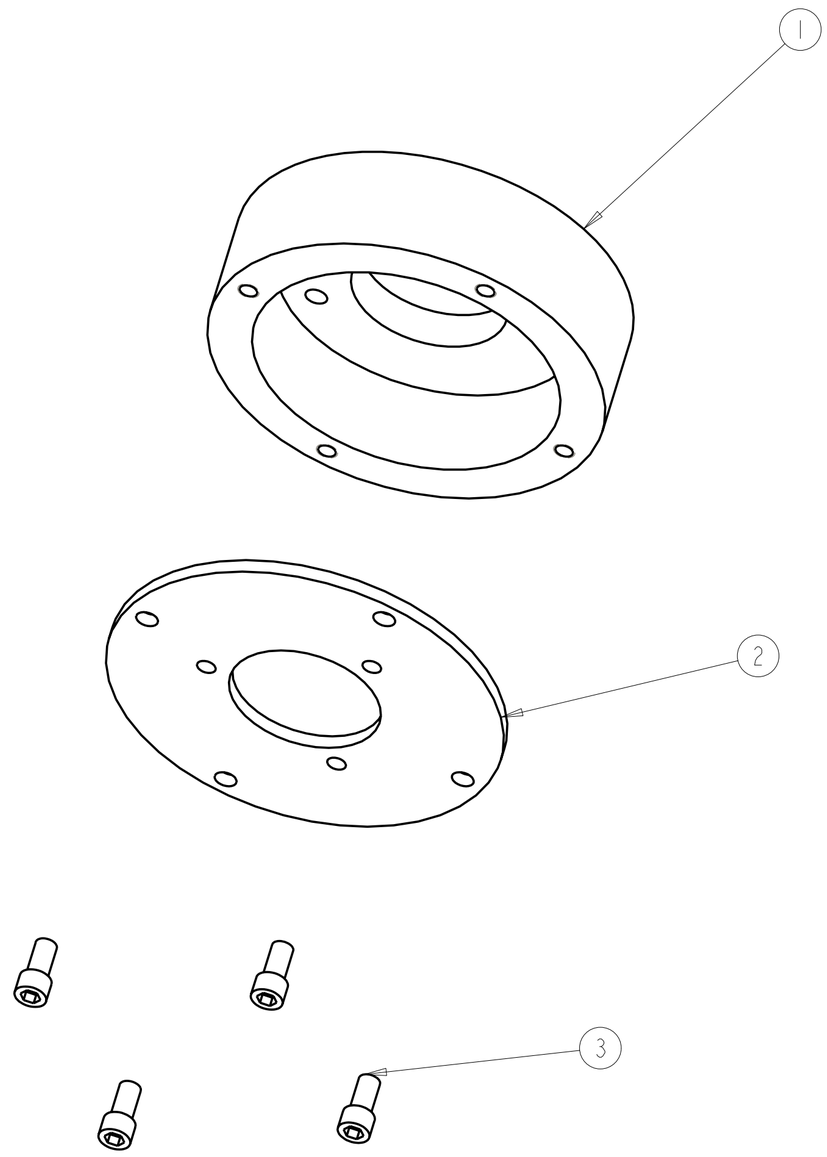

Part Number	Part Description	Quantity
1	Coupler Housing	1
2	Pump Plate	1
3	3/8 X 16 X 1/2 S.H.C.S.	4

TITLE:
COUPLER HOUSING
for Micropilot Pump

SCALE:	DWG #:		LAST REVISED:
0.5 : 1	MP - 03		7/14/04
DESIGN: CHASE	DETAIL: CHASE	SHEET: 1 of 1	DRAWN: 7/14/04

CSU ENGINES & ENERGY CONVERSION LAB

Fuel Return

Parts List

SS-600-3-6-4	10PCS
SS-600-3	1PCS
SS-600-P	2PCS
SS-400-6	10PCS
SS-2-HC-A-401	10PCS
3/8"x0.035" Seamless SS Tubing	25Feet
1/4"x0.035" Seamless SS Tubing	~60Feet

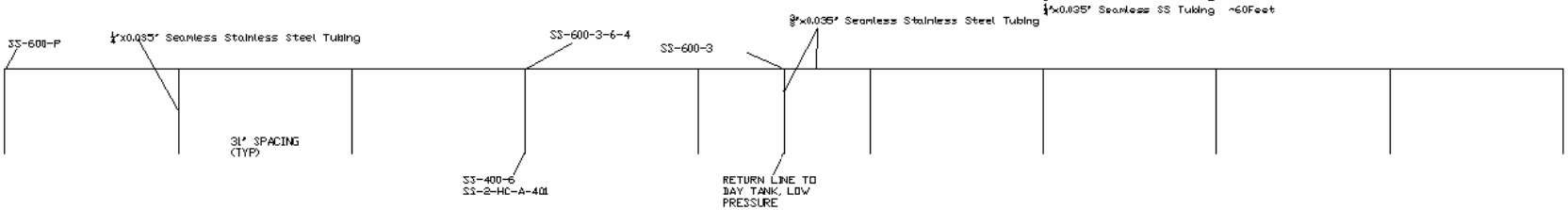

Coolant Supply

Parts List
SS-810-3-8-4 10PCS
SS-810-P 2PCS
SS-400-6 10PCS
$\frac{1}{4}$"x0.035" Seamless SS Tubing 25Feet
$\frac{1}{4}$"x0.028" Seamless SS Tubing ~60Feet

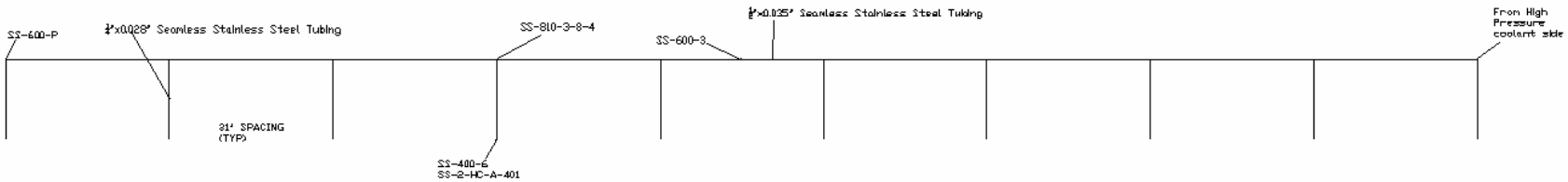

Fuel Header

Parts List
SS-810-3-8-6 11PCS
SS-600-6-4 10PCS
1/4" x 0.063" Seamless SS Tubing ~20Feet
3/8" x 0.065" Seamless SS Tubing ~60Feet

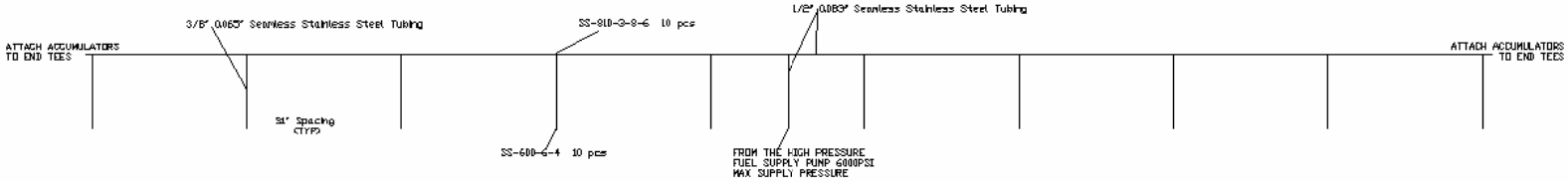

Coolant Return

Parts List
SS-810-3-8-4 10PCS
SS-810-P 2PCS
SS-400-6 10PCS
$\frac{1}{8}$"x0.035" Seamless SS Tubing 25Feet
$\frac{1}{4}$"x0.028" Seamless SS Tubing ~60Feet

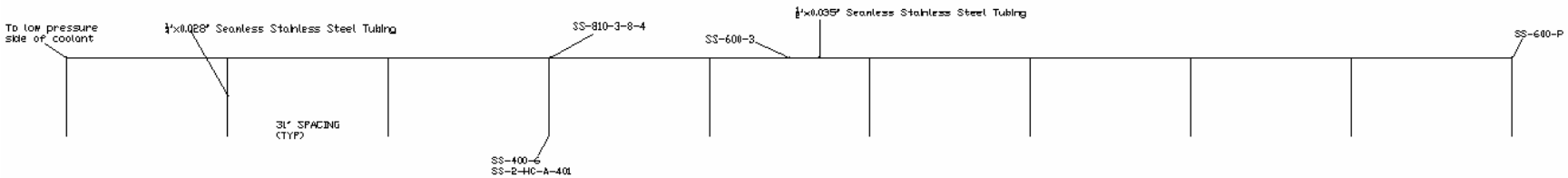

Micro-Pilot Fuel Delivery Unit
Motor Control Schematic

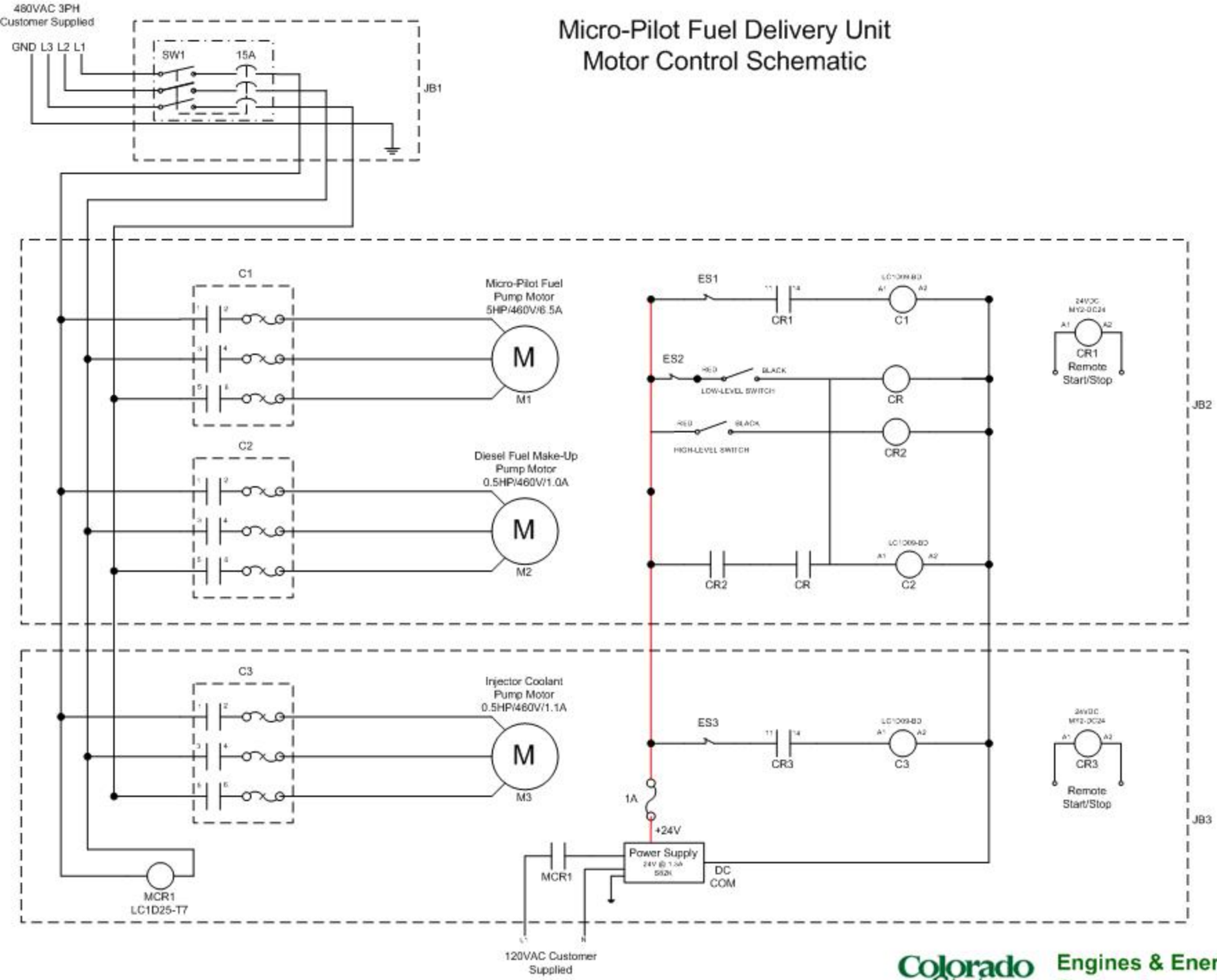

Colorado State University
Knowledge to Go Places

Engines & Energy
Conversion
Laboratory

Control Wiring Diagram

MICRO PILOT DEVELOPEMENT
UNIT 5A
2 STROKE / DC POWER

Engine Manufacturer	Worthington
Engine Model	SUTC-10
Engine Drive	Compressor
Control Type	Inpulse-II

UNSIGNED DRAWINGS ARE FOR REFERENCE ONLY

- ☐ PRELIMINARY FOR CUSTOMER REVIEW — APP BY:_____ DATE:_____
- ☐ ISSUED FOR CONSTRUCTION — APP BY:_____ DATE:_____
- ☐ AS BUILT — APP BY:_____ DATE:_____
- ☐ PRELIMINARY FOR SUPPLIER REVIEW — APP BY:_____ DATE:_____
- ☐ RELEASED FOR PRODUCTION — APP BY:_____ DATE:_____

THIS DRAWING OR ANY REPRODUCTION OF IT SHALL NOT BE USED FOR MANUFACTURE, PRODUCTION OR PROCUREMENT WITHOUT THE EXPRESS WRITTEN CONSENT OF ENGINUITY. USE OR REPRODUCTION FOR USE IN A NORMAL MANNER ASSOCIATED WITH GOODS OR SERVICES FURNISHED OR TENDERED BY ENGINUITY IS APPROVED.

LEGEND

- FIELD WIRING
- CABINET WIRING

ECO #	REV	DATE	DESCRIPTION	APP

REVISION

UNLESS OTHERWISE SPECIFIED DIMENSIONS ARE IN INCHES

TOLERANCES ARE:
.X=±.1
.XX=±.01
.XXX=±.005
.XXXX=±.0001
X/X=±1/16
DIMENSION=1°

CAD GENERATED DRAWING. DO NOT MANUALLY UPDATE

DATE 6/24/03
DO NOT SCALE DRAWING

ENGINUITY

ENGINEERED SH
DRAWN DJ

EL PASO NATURAL GAS
UNIT 5A
WORTHINGTON SUTC-10
2 STROKE / DC Power

CONTROLS AND INSTRUMENTATION

CONTROL WIRING DIAGRAM

SIZE | DWG NO: 15276 | REV: 0

SCALE: NONE | SHEET ■ OF ■

NOTES:

1. SHIELDS MUST NOT BE GROUNDED AT ANY EXTERNAL POINT UNLESS OTHERWISE NOTED.
2. SHIELDS MUST BE CARRIED CONTINUOUSLY THROUGH ALL TERMINAL BLOCKS AND CAN NOT BE TIED TO OTHER SHIELDS EXCEPT AT COMMON GROUND POINT.
3. ANALOG INPUTS FROM OTHER SYSTEMS MUST BE ISOLATED FROM GROUND EITHER, BY DESIGN OR BY ISOLATION AMPLIFIERS.
4. ANALOG OUTPUTS FROM OTHER SYSTEMS MUST BE ISOLATED FROM GROUND EITHER, BY DESIGN OR BY ISOLATION AMPLIFIERS. MAXIMUM LOADING IS 700 OHMS.
5. DISCRETE INPUTS ARE ISOLATED FROM OTHER CIRCUITS. INPUT CURRENT IS TYPICALLY 10 MA PER INPUT INTO 2100 OHMS.
6. DISCRETE OUTPUTS ARE SHOWN DE-ENERGIZED AND ENERGIZED FOR FUNCTION. CONTACT RATINGS ARE: 0.6 AMP AT 115 VAC BREAKING
   4 AMP AT 28 VDC BREAKING
7. VERIFY EACH CONNECTION BEFORE OPERATING SYSTEM.
8. TERMINALS MARKED "N/C" MUST REMAIN OPEN.
9. MAINTAIN SEPARATION OF HIGH AND LOW CURRENT WIRING BOTH INSIDE CABINET AND IN FIELD WIRING. POWER INTO THE CABINET MUST BE RUN THROUGH ITS OWN CONDUIT. THE VALVE DRIVE SIGNALS MUST ALSO BE RUN IN ISOLATED CONDUIT. THE REMAINING SIGNALS MAY BE RUN IN THE SAME CONDUIT.
10. ALL WIRE TERMINATION ENDS SHALL BE IDENTIFIED WITH HEAT-SHRINKABLE, PERMANENT TYPE. LABELS WILL SHOW LOCATION AND DESTINATION OF THE WIRE IN THE FORMAT "LOCATION/DESTINATION".
11. USE ENGINUITY (P/N 11987), 16 AWG, 2 CONDUCTOR SHIELDED CABLE OR EQUIVALENT, FOR ALL 2 CONDUCTOR RUNS UNLESS SPECIFIED OTHERWISE IN A LOCAL NOTE.
12. USE 22 THHN AWG BLK WIRE FOR SINGLE CONDUCTOR RUNS (+ POWER).
13. USE 22 THHN AWG WHT WIRE FOR SINGLE CONDUCTOR RUNS (-POWER).
14. USE ENGINUITY P/N 12246, 20 AWG, 3 CONDUCTOR SHIELDED CABLE OR EQUIVALENT, FOR ALL RUNS UNLESS SPECIFIED OTHERWISE IN A LOCAL NOTE.
15. USE 22 AWG WHT WIRE TO JUMPER TERMINALS.
16. INSULATE UNUSED WIRES WITH HEAT SHRINK TUBING AND TIE BACK.
17. SPARE WIRE- CUT WITH ENOUGH LENGTH TO REACH WORKING AREA IN UNIT CONTROL PANEL, NEATLY COIL, LABEL, AND LAY AT FLOOR OF HPFi PANEL.
18. USE HEAT SHRINK TO COVER CABLES WHERE THE INSULATION HAS BEEN CUT BACK FOR TERMINATION.

UNSIGNED DRAWINGS ARE FOR REFERENCE ONLY

☐ PRELIMINARY FOR CUSTOMER REVIEW	APP BY:_____	DATE:_____	☐ PRELIMINARY FOR SUPPLIER REVIEW	APP BY:_____	DATE:_____
☐ ISSUED FOR CONSTRUCTION	APP BY:_____	DATE:_____	☐ RELEASED FOR PRODUCTION	APP BY:_____	DATE:_____
☐ AS BUILT	APP BY:_____	DATE:_____			

THIS DRAWING OR ANY REPRODUCTION OF IT SHALL NOT BE USED FOR MANUFACTURE, PRODUCTION OR PROCUREMENT WITHOUT THE EXPRESS WRITTEN CONSENT OF ENGINUITY. USE OR REPRODUCTION FOR USE IN A NORMAL MANNER ASSOCIATED WITH GOODS OR SERVICES FURNISHED OR TENDERED BY ENGINUITY IS APPROVED.

LEGEND

ECO #	REV	DATE	DESCRIPTION	APP

REVISION

UNLESS OTHERWISE SPECIFIED DIMENSIONS ARE IN INCHES

TOLERANCES ARE:
X=±1
.XX=±.01
.XXX=±.005
.XXXX=±.0001
X/Y=1/16"
DIAM=±1°

CAD GENERATED DRAWING. DO NOT MANUALLY UPDATE

DATE 6/24/03
DO NOT SCALE DRAWING

ENGINUITY

ENGINEERED SH
DRAWN DJ

EL PASO NATURAL GAS
UNIT 5A
WORTHINGTON SUTC-10
2 STROKE / DC POWER

CONTROLS AND INSTRUMENTATION

CONTROL WIRING DIAGRAM

SIZE | DWG NO: 15276 | REV: 0
SCALE: NONE | SHEET ■ OF ■

ITEM	QTY	DESCRIPTION	MANUFACTURER	PART#
1	1	Box, 6 x 6 x 5 Hoffman with 7 Terminal Blocks, MPU	Enginuity	10115
2	4	Cap Screw, Hex Head, 5/16-18 x 5/8", SAE J429 Grade 8, Zinc Coated	Fastenal	15052
3	4	Washer, External Tooth, 5/16", Zinc Plated	Fastenal	33738
4	4	Magnetic Pick-up, 5/8"-18 Thread, 3.00" Threaded Body Length	Altronic	691118-3
5	4	Cable Assembly, Magnetic Pick-up - 180 deg, Shielded, 48" Conduit	Altronic	593048-48
6	1	Mount, Magnetic Pickup Plate	Enginuity	10108
7	4	Conduit Hub, 1/2" Conduit, Steel	Crouse Hinds	HUB1
8	3	Conduit Hub, 1" Conduit, Steel	Crouse Hinds	HUB3
9	REF	1" Rigid Steel Conduit	Conduit	1" Conduit
10	REF	Cable - 16 AWG Twisted Shielded Pair Wire	Raychem	FLDWC1321-16-9/0-9CS3050
11	1	Kit, Mounting Plate, for EJB style A, B1, B2 boxes 6x8"	Crouse Hinds	EJB-MP68
12	1	Expanded Fill Sealing Fitting, 1" Hub	Crouse Hinds	EYSX31
13	1	Driver, Solenoid, Remote Mount, 4-20 MA In, 1.2 Amp out,	Axiomatic	RSD-SMB-4-20MA-1.2A-00
14	1	Junction Box, Explosionproof, 8x6x4 style EJB (1) 1" hole each side	Crouse Hinds	EJB684-1-0C-0C-0C-0C
15	1	Power Supply, DC/DC converter 24 to 5 VDC 25 watt	Vicor	VI-LJ10-EZ

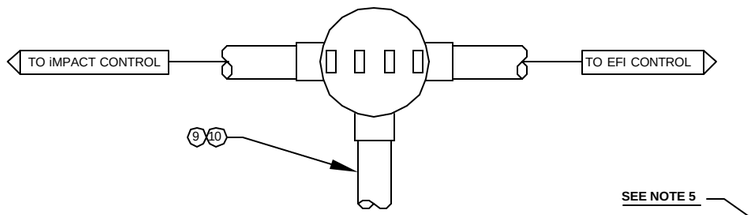

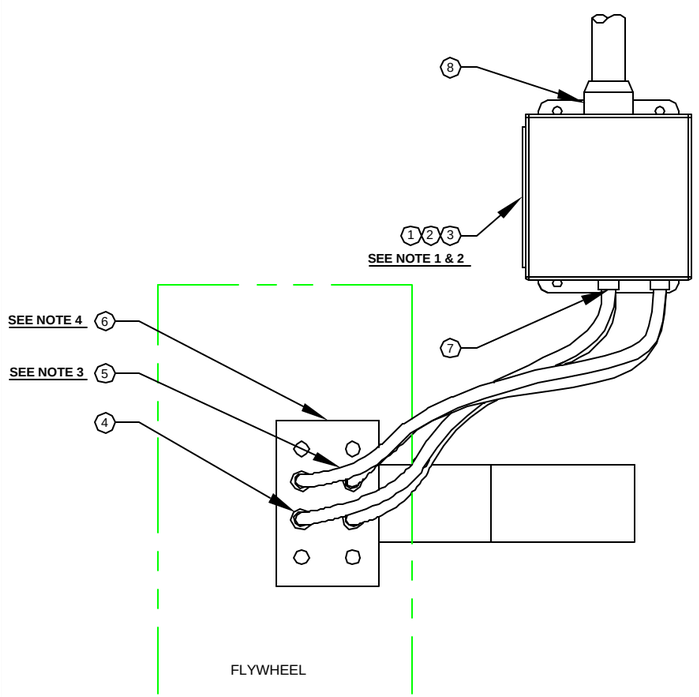

MAGNETIC PIC-UP CONDUIT DETAIL

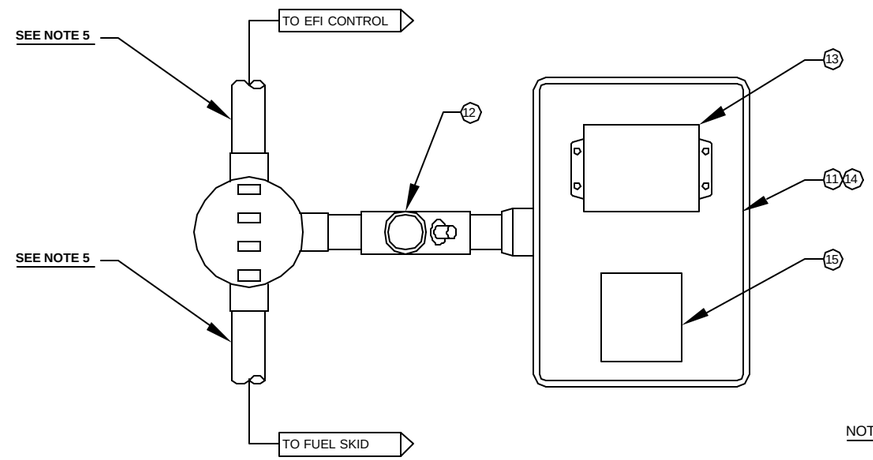

FUEL SKID CONDUIT DETAIL

NOTES:

1. **MAGNETIC PICK-UP JUNCTION BOX 10115 REQUIRES FIELD PUNCHING FOR REQUIRED CONDUIT ENTRIES. MAY BE PUNCHED AND ORIENTED TO BEST SUIT SITE CONDITIONS.**
2. **LOCATE MAG PICK-UP JUNCTION BOX 10115 WITHIN SENSOR'S 48" CABLE REACH. LOCATE ON ENGINE BLOCK, DRILL TAP AND FASTEN AS SITE CONDITIONS PERMIT.**
3. **GATHER AND ZIP TIE, 3 PLACES MINIMUM, 48' FLEXIBLE SENSOR CABLE.**
4. **MAGNETIC PICK-UP BRACKET 10108 INSTALLED IN ENGINE MECHANICAL DRAWINGS.**
5. **USE ASSEMBLY AT CABINET. CAN BE USED FOR TOP OR BOTTOM ENTRY. SEE DRAWING 11893 FOR DETAILS.**
6. WIRE AND CONDUIT QUANTITIES ARE BASED ON THE HPFi CABINET BEING LOCATED WITHIN 50' NOMINAL.
7. SEE EFI CONTROL CABINET AND iMPACT WIRING DIAGRAM FOR TERMINATION AND LABELING SPECIFICATIONS.
8. PULL 2 TWISTED PAIR FROM MPU BOX TO EFI CABINET, PULL 2 TWISTED PAIR FROM MPU BOX TO THE iMPACT CABINET.
9. SEE MPU INSTALLATION SPECIFICATION DRAWING #11922 FOR DETAILS.

UNSIGNED DRAWINGS ARE FOR REFERENCE ONLY

- ☐ PRELIMINARY FOR CUSTOMER REVIEW — APP BY:_____ DATE:_____
- ☐ ISSUED FOR CONSTRUCTION — APP BY:_____ DATE:_____
- ☐ AS BUILT — APP BY:_____ DATE:_____
- ☐ PRELIMINARY FOR SUPPLIER REVIEW — APP BY:_____ DATE:_____
- ☐ RELEASED FOR PRODUCTION — APP BY:_____ DATE:_____

THIS DRAWING OR ANY REPRODUCTION OF IT SHALL NOT BE USED FOR MANUFACTURE, PRODUCTION OR PROCUREMENT WITHOUT THE EXPRESS WRITTEN CONSENT OF ENGINUITY. USE OR REPRODUCTION FOR USE IN A NORMAL MANNER ASSOCIATED WITH GOODS OR SERVICES FURNISHED OR TENDERED BY ENGINUITY IS APPROVED.

LEGEND

- EXISTING PIPING/EQUIPMENT
- NEW PIPING/EQUIPMENT

ECO #	REV	DATE	DESCRIPTION	APP

REVISION

UNLESS OTHERWISE SPECIFIED DIMENSIONS ARE IN INCHES

TOLERANCES ARE:
.X=±.1
.XX=±.01
.XXX=±.005
.XXXX=±.0001
X/X=±1/32
DEGREE=±1°

CAD GENERATED DRAWING. DO NOT MANUALLY UPDATE

DATE 7/1/04
DO NOT SCALE DRAWING

ENGINUITY

ENGINEERED SH
DRAWN HM

EL PASO NATURAL GAS
UNIT 5A
WORTHINGTON SUTC-10

ELECTRICAL SYSTEM

ELECTRICAL INSTALLATION

MAGNETIC PICKUP JUNTION BOX

SIZE | DWG NO: 15344 | REV: 0
SCALE: NONE | SHEET ■ OF ■

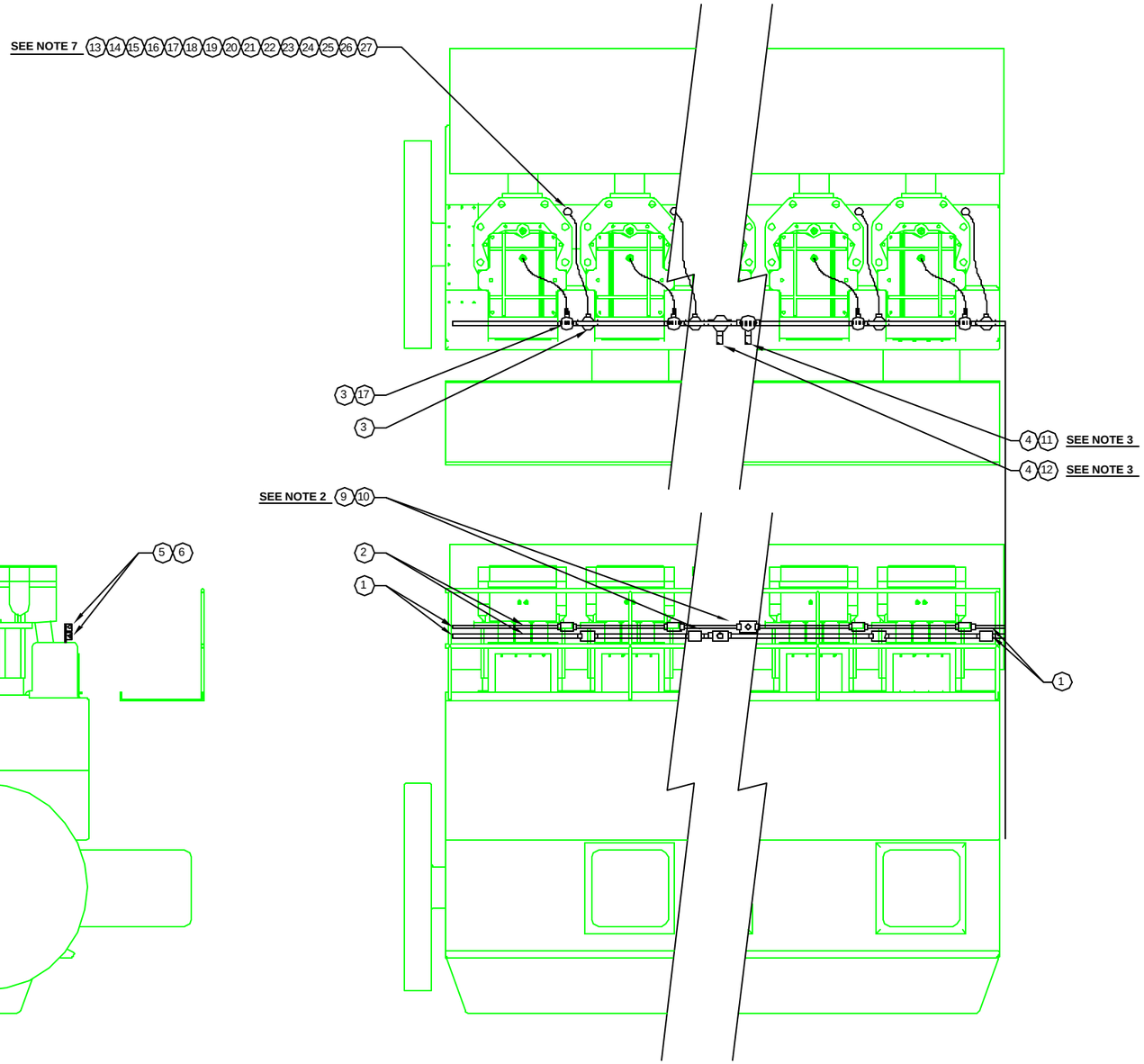

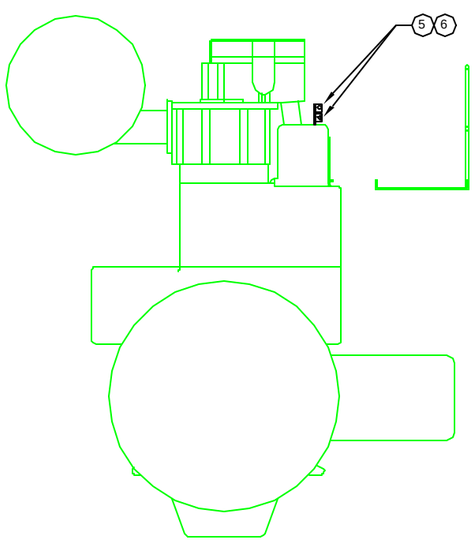

ITEM	QTY	DESCRIPTION	MANUFACTURER	PART#
1	4	Conduit Plug, Recessed Head, Rigid, 1"	Crouse Hinds	PLG3M
2	30'	1" Rigid Steel Conduit	Conduit	1 CONDUIT
3	20	1" FNPT Guat Conduit Tee Body	Crouse Hinds	GUAT36
4	10'	1 1/2" Rigid Steel Conduit	Conduit	1 1/2 CONDUIT
5	20	Pipe Support Kit, 1" Pipe	Swagelok	304-S5-PP-16P
6	40	Cap Screw, Hex Head, 1/4-20 x 3 1/4", Yellow Zinc	Fastenal	15016
7	REF	Conduit Union, Male, 1"	Crouse Hinds	UNY305
8	REF	Condulet Conduit Outlet Elbow, 1"	Crouse Hinds	LBY35
9	2	Condulet Conduit Outlet Box, 1 1/2" Hub 5" Cover Opening, With cover	Crouse Hinds	GUAT59
10	4	Conduit Reducer, Explosion Proof, 1 1/2" MNPT x 1" FNPT, Steel	Crouse Hinds	RE53
11	500'	Cable - 16 AWG Twisted Shielded Pair Wire	Raychem	FLDWC1321-16-9/0-9CS3050
12	500'	Wire, 3 conductor, 20 gage shielded, 9/2/0 Conductor Insulation Color	Raychem	FLDWC1331-20-ELC3-9CS3050
13	10	Indicator Valve, 3/4-16 thrd	Kiene Diesel	SP-06225
14	10	Adapter Cable, 8 Pin DIN to 5 Pin DIN	Enginuity	11584
15	10	Pressure Sensor - Power Cylinder HTT-01(XF) w/ Seal Washer 0-150	Kistler	TBD
16	10	Compression Fitting	Crouse Hinds	CGB396
17	10	Strain Relief, .250-.375 dia, w/sealing gasket, locknut, bushing, 1" thread	Crouse Hinds	CGB393
18	10	Plug, 14mm X 1.25 mm SMV Sensor Port	Kiene Diesel	SP-06042
19	10	POS-I-SEAL Indicator Valve Cap, Steel, with Integral Brass Sealing Plug	Kiene Diesel	AX-17A
20	10	Gasket, TBD	Kiene Diesel	AX-39-9
21	10	Cable Ties	Grainger	1A868
22	1	Loctite Nickel Antiseize	Loctite	77124
23	10	Engine Adapter, TBD	Kiene Diesel	SP-06253-2
24	10	Flame Arrestor, TBD	Kiene Diesel	SP-06236-1
25	10	Nut Connector, TBD	Kiene Diesel	SP-06236-2
26	10	Connector, 5 Pin DIN	Lumberg	RKC-5/9
27	10	Engine Adapter, TBD	Kiene Diesel	SP-06253-1

NOTES:

1. FASTEN CONDUIT TO EXISTING UNISTRUT.
2. **TEES MUST BE LOCATED BETWEEN CYLINDERS 2 AND 8.**
3. **PULL 1 CABLE PER CYLINDER.**
4. WIRE AND CONDUIT QUANTITIES ARE BASED ON CONTROL CABINETS BEING LOCATED WITHIN 30' OF THE ENGINE.
5. SEE CONTOL WIRING DIAGRAMS FOR WIRING TERMINATION AND LABELING REQUIREMENTS.
6. SUPPORT CONDUIT PER NEC REQUIREMENTS.
7. **REFER TO iMPACT POWER SIDE SENSOR INSTALLATION FOR DETAILS.**

UNSIGNED DRAWINGS ARE FOR REFERENCE ONLY

☐ PRELIMINARY FOR CUSTOMER REVIEW	APP BY:_____	DATE:_____	☐ PRELIMINARY FOR SUPPLIER REVIEW	APP BY:_____	DATE:_____
☐ ISSUED FOR CONSTRUCTION	APP BY:_____	DATE:_____	☐ RELEASED FOR PRODUCTION	APP BY:_____	DATE:_____
☐ AS BUILT	APP BY:_____	DATE:_____			

THIS DRAWING OR ANY REPRODUCTION OF IT SHALL NOT BE USED FOR MANUFACTURE, PRODUCTION OR PROCUREMENT WITHOUT THE EXPRESS WRITTEN CONSENT OF ENGINUITY. USE OR REPRODUCTION FOR USE IN A NORMAL MANNER ASSOCIATED WITH GOODS OR SERVICES FURNISHED OR TENDERED BY ENGINUITY IS APPROVED.

LEGEND

ECO #	REV	DATE	DESCRIPTION	APP

REVISION

UNLESS OTHERWISE SPECIFIED DIMENSIONS ARE IN INCHES

TOLERANCES ARE:
.x= 1
.XX=.01
.XXX=.005
.XXXX=.0001
X/X=1/64"
ANGLES=1°

CAD GENERATED DRAWING. DO NOT MANUALLY UPDATE

DATE 7/1/04
DO NOT SCALE DRAWING

ENGINUITY

ENGINEERED SH
DRAWN HM

EL PASO NATURAL GAS
UNIT 5A
WORTHINGTON SUTC-10

ELECTRICAL SYSTEM

ELECTRICAL INSTALLATION

CONDUIT PLAN LAYOUT

SIZE DWG NO: 15343 REV: 0
SCALE: NONE SHEET ■ OF ■

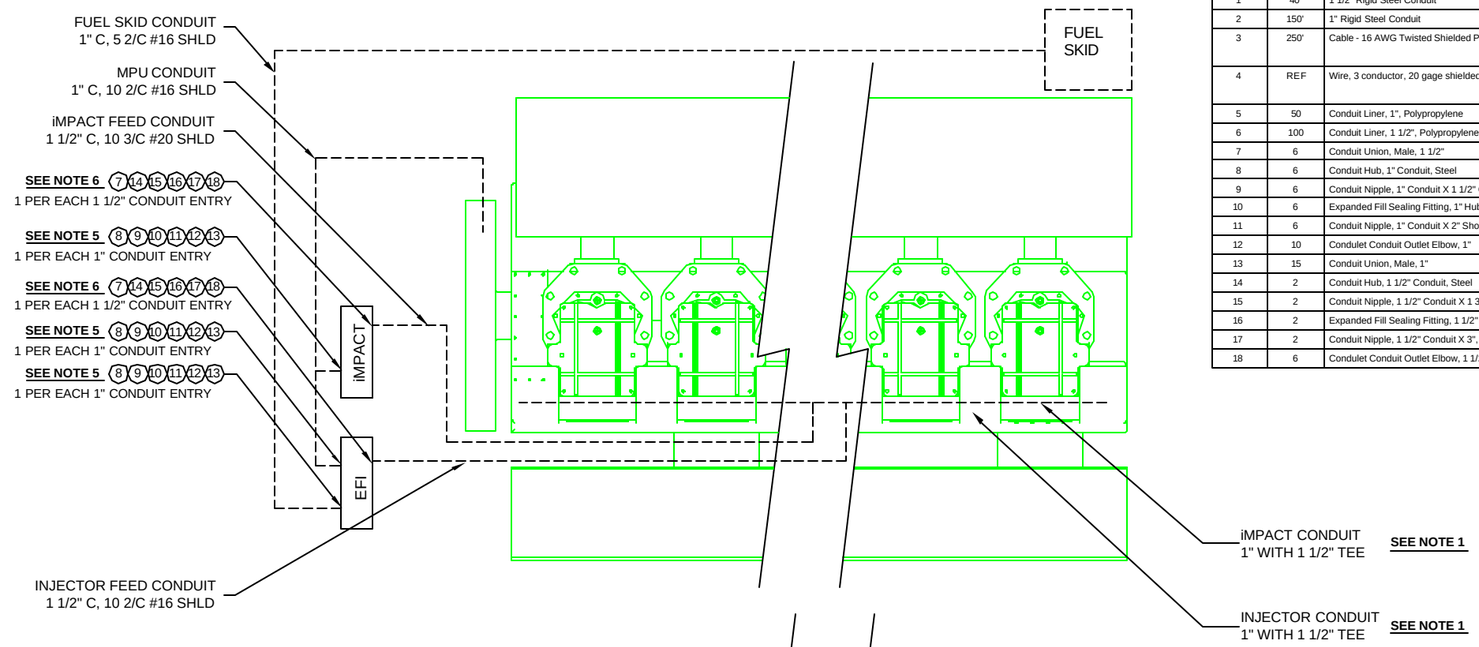

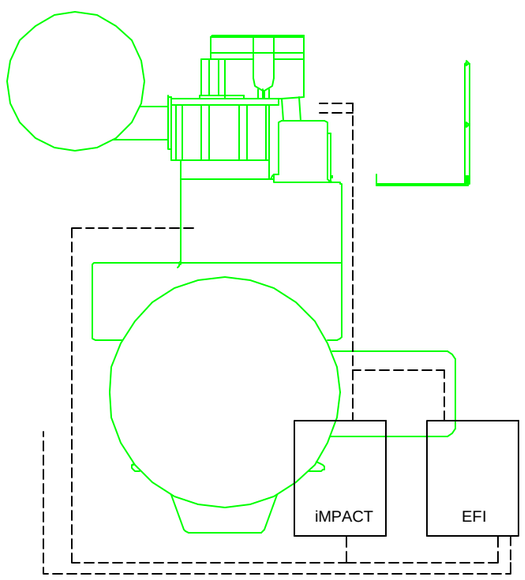

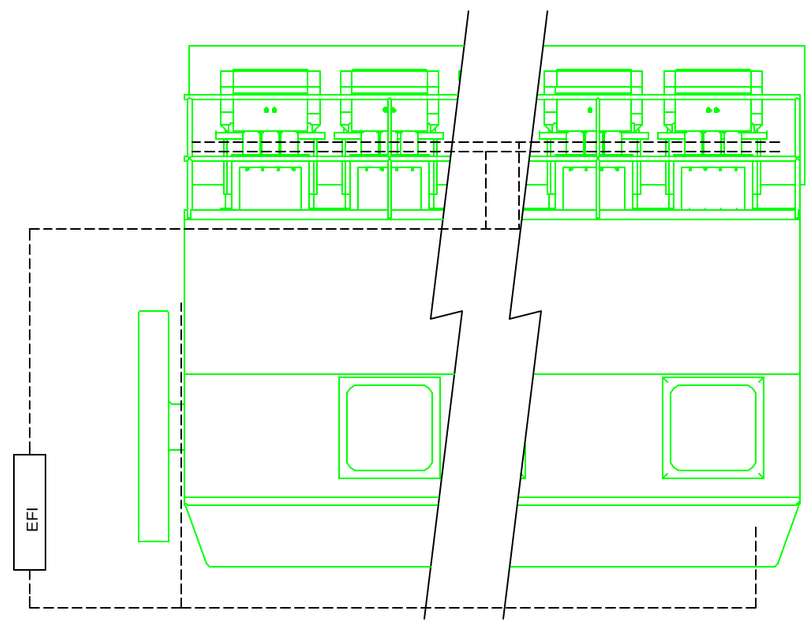

ITEM	QTY	DESCRIPTION	MANUFACTURER	PART#
1	40'	1 1/2" Rigid Steel Conduit	Conduit	1 1/2" Conduit
2	150'	1" Rigid Steel Conduit	Conduit	1" Conduit
3	250'	Cable - 16 AWG Twisted Shielded Pair Wire	Raychem	FLDWC1321-16-9/0-9CS3050
4	REF	Wire, 3 conductor, 20 gage shielded, 9/2/0 Conductor Insulation Color	Raychem	FLDWC1331-20-ELC3-9/0-9CS3050
5	50	Conduit Liner, 1", Polypropylene	Crouse Hinds	LNR3
6	100	Conduit Liner, 1 1/2", Polypropylene	Crouse Hinds	LNR5
7	6	Conduit Union, Male, 1 1/2"	Crouse Hinds	UNY505
8	6	Conduit Hub, 1" Conduit, Steel	Crouse Hinds	HUB3
9	6	Conduit Nipple, 1" Conduit X 1 1/2" Close, Steel	Crouse Hinds	1515
10	6	Expanded Fill Sealing Fitting, 1" Hub	Crouse Hinds	EYSX31
11	6	Conduit Nipple, 1" Conduit X 2" Short, Steel	Crouse Hinds	1516
12	10	Condulet Conduit Outlet Elbow, 1"	Crouse Hinds	LBY35
13	15	Conduit Union, Male, 1"	Crouse Hinds	UNY305
14	2	Conduit Hub, 1 1/2" Conduit, Steel	Crouse Hinds	HUB5
15	2	Conduit Nipple, 1 1/2" Conduit X 1 3/4" Close, Steel	Crouse Hinds	1529
16	2	Expanded Fill Sealing Fitting, 1 1/2" Hub	Crouse Hinds	EYSX51
17	2	Conduit Nipple, 1 1/2" Conduit X 3", Steel	Crouse Hinds	1531
18	6	Condulet Conduit Outlet Elbow, 1 1/2"	Crouse Hinds	LBY55

NOTES:

1. CONDUIT TEE MUST BE LOCATED BETWEEN CYLINDER 2 THROUGH 8.
2. ROUTE AND MOUNT PER CUSTOMER SPECIFICATION.
3. FIELD LOCATE CONTROL CABINETS IN THIS AREA PER CUSTOMER REQUIREMENTS.
4. LOCATE SEAL FITTINGS AND SUPPORT CONDUIT PER NEC REQUIREMENTS.
5. SEE 1" ENTRY ASSEMBLY DETAIL DRAWING# 11893 FOR DETAILS.
6. SEE 1 1/2" ENTRY ASSEMBLY DETAIL DRAWING# 11894 FOR DETAILS.

UNSIGNED DRAWINGS ARE FOR REFERENCE ONLY

☐ PRELIMINARY FOR CUSTOMER REVIEW	APP BY:_____	DATE:_____	☐ PRELIMINARY FOR SUPPLIER REVIEW	APP BY:_____	DATE:_____
☐ ISSUED FOR CONSTRUCTION	APP BY:_____	DATE:_____	☐ RELEASED FOR PRODUCTION	APP BY:_____	DATE:_____
☐ AS BUILT	APP BY:_____	DATE:_____			

THIS DRAWING OR ANY REPRODUCTION OF IT SHALL NOT BE USED FOR MANUFACTURE, PRODUCTION OR PROCUREMENT WITHOUT THE EXPRESS WRITTEN CONSENT OF ENGINUITY. USE OR REPRODUCTION FOR USE IN A NORMAL MANNER ASSOCIATED WITH GOODS OR SERVICES FURNISHED OR TENDERED BY ENGINUITY IS APPROVED.

LEGEND

ECO #	REV	DATE	DESCRIPTION	APP

REVISION

UNLESS OTHERWISE SPECIFIED DIMENSIONS ARE IN INCHES

TOLERANCES ARE:
.X= ±
.XX= ±.01
.XXX= ±.005
.XXXX= ±.0001
X/X= ±1/64"
DEGREES= ±

CAD GENERATED DRAWING. DO NOT MANUALLY UPDATE

DO NOT SCALE DRAWING

ENGINUITY

EL PASO NATURAL GAS
UNIT 5A
WORTHINGTON SUTC-10

ELECTRICAL SYSTEM

ELECTRICAL INSTALLATION

CONDUIT PLAN LAYOUT

DATE 7/1/04	ENGINEERED SH	SIZE	DWG NO: 15342	REV: 0
	DRAWN HM	SCALE: NONE	SHEET ___ OF ___

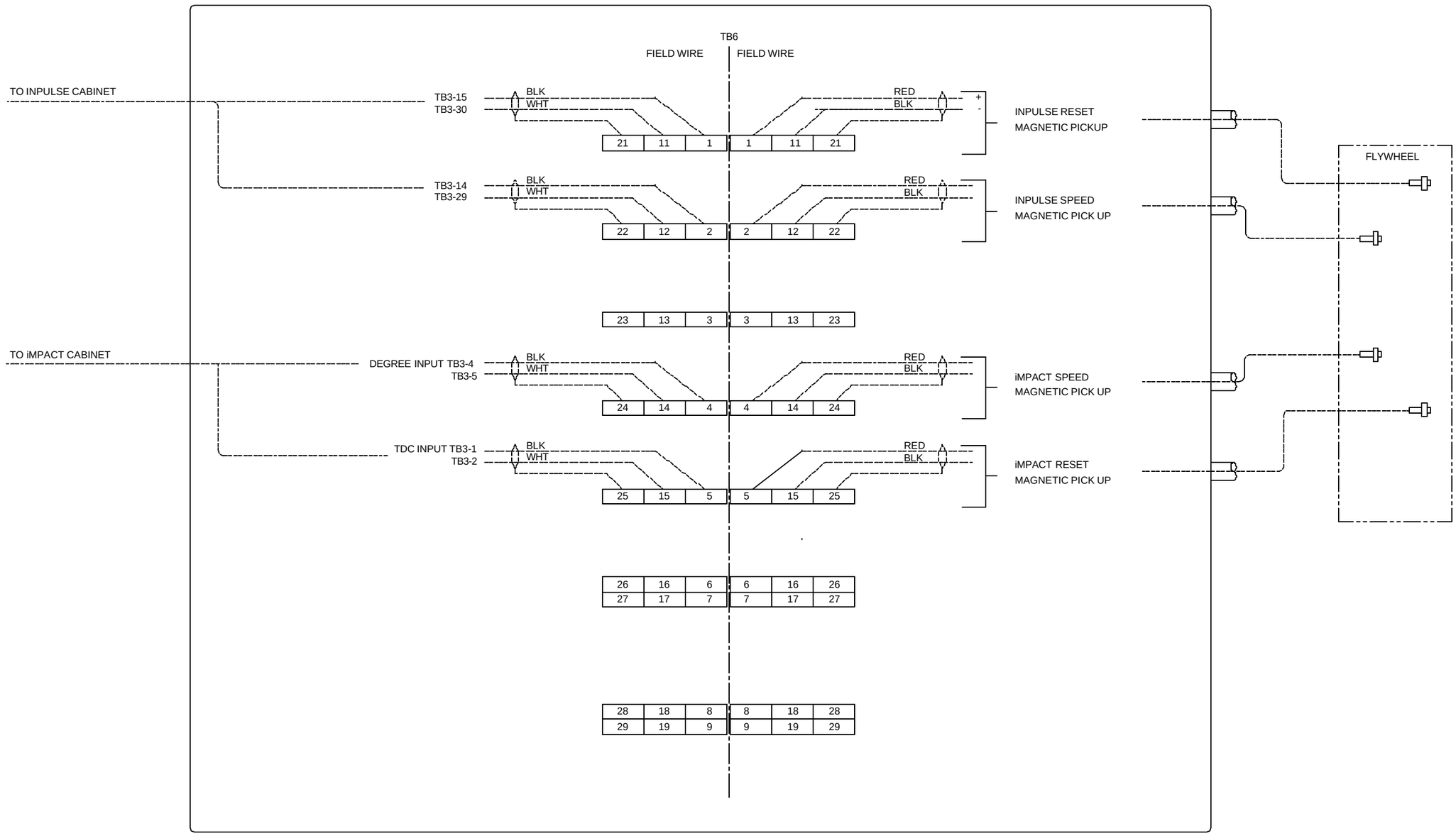

MAGNETIC PICK UP JUNCTION BOX

UNSIGNED DRAWINGS ARE FOR REFERENCE ONLY

☐ PRELIMINARY FOR CUSTOMER REVIEW	APP BY:_____	DATE:_____
☐ ISSUED FOR CONSTRUCTION	APP BY:_____	DATE:_____
☐ AS BUILT	APP BY:_____	DATE:_____
☐ PRELIMINARY FOR SUPPLIER REVIEW	APP BY:_____	DATE:_____
☐ RELEASED FOR PRODUCTION	APP BY:_____	DATE:_____

THIS DRAWING OR ANY REPRODUCTION OF IT SHALL NOT BE USED FOR MANUFACTURE, PRODUCTION OR PROCUREMENT WITHOUT THE EXPRESS WRITTEN CONSENT OF ENGINUITY. USE OR REPRODUCTION FOR USE IN A NORMAL MANNER ASSOCIATED WITH GOODS OR SERVICES FURNISHED OR TENDERED BY ENGINUITY IS APPROVED.

LEGEND

- - - - - - - - - - FIELD WIRING

———————— CABINET WIRING

ECO #	REV	DATE	DESCRIPTION	APP

REVISION

UNLESS OTHERWISE SPECIFIED DIMENSIONS ARE IN INCHES

TOLERANCES ARE:
.X=±1
.XX=±.01
.XXX=±.005
.XXXX=±.0001
X/X=±1/16"
DIM=±1°

CAD GENERATED DRAWING. DO NOT MANUALLY UPDATE

DATE 6/24/03

DO NOT SCALE DRAWING

ENGINUITY

ENGINEERED SH

DRAWN DJ

EL PASO NATURAL GAS
UNIT 5A
WORTHINGTON SUTC-10
2 STROKE / DC POWER

CONTROLS AND INSTRUMENTATION

CONTROL WIRING DIAGRAM

SIZE | DWG NO: 15276 | REV: 0

SCALE: NONE | SHEET ■ OF ■

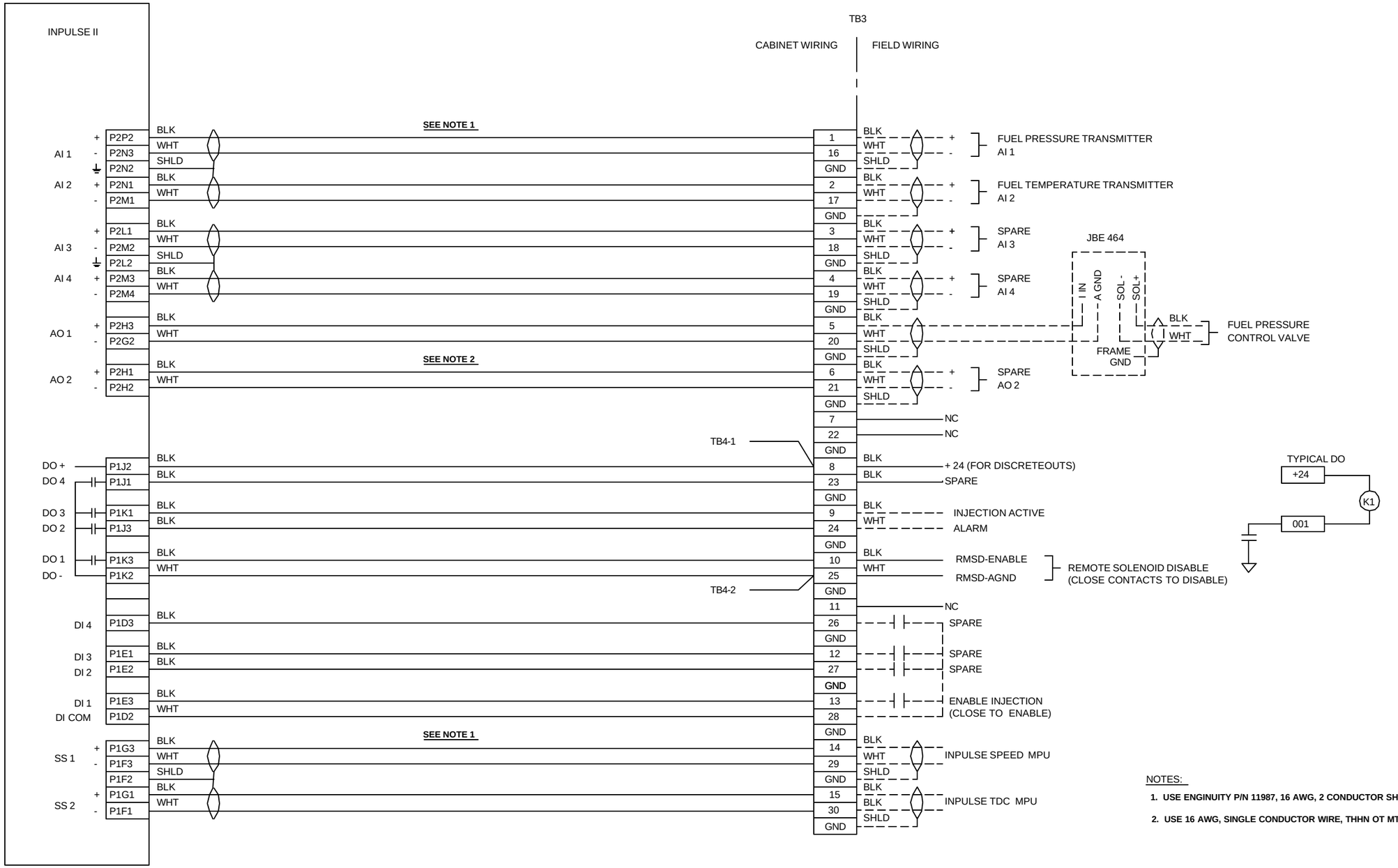

NOTES:

1. **USE ENGINUITY P/N 11987, 16 AWG, 2 CONDUCTOR SHIELDED CABLE.**
2. **USE 16 AWG, SINGLE CONDUCTOR WIRE, THHN OT MTW.**

UNSIGNED DRAWINGS ARE FOR REFERENCE ONLY

☐ PRELIMINARY FOR CUSTOMER REVIEW	APP BY:_____	DATE:_____	☐ PRELIMINARY FOR SUPPLIER REVIEW	APP BY:_____	DATE:_____
☐ ISSUED FOR CONSTRUCTION	APP BY:_____	DATE:_____	☐ RELEASED FOR PRODUCTION	APP BY:_____	DATE:_____
☐ AS BUILT	APP BY:_____	DATE:_____			

THIS DRAWING OR ANY REPRODUCTION OF IT SHALL NOT BE USED FOR MANUFACTURE, PRODUCTION OR PROCUREMENT WITHOUT THE EXPRESS WRITTEN CONSENT OF ENGINUITY. USE OR REPRODUCTION FOR USE IN A NORMAL MANNER ASSOCIATED WITH GOODS OR SERVICES FURNISHED OR TENDERED BY ENGINUITY IS APPROVED.

LEGEND

— — — — — — FIELD WIRING

———— CABINET WIRING

ECO #	REV	DATE	DESCRIPTION	APP

REVISION

UNLESS OTHERWISE SPECIFIED DIMENSIONS ARE IN INCHES

TOLERANCES ARE:
.X=.1
.XX=.01
.XXX=.005
.XXXX=.0001
X/Y=1/16"
DEMICIM=1°

CAD GENERATED DRAWING DO NOT MANUALLY UPDATE

DO NOT SCALE DRAWING

ENGINUITY

EL PASO NATURAL GAS
UNIT 5A
WORTHINGTON SUTC-10
2 STROKE / DC POWER

CONTROLS AND INSTRUMENTATION

CONTROL WIRING DIAGRAM

DATE 6/24/03	ENGINEERED SH	SIZE	DWG NO: 15276	REV: 0
	DRAWN DJ	SCALE: NONE	SHEET ▮ OF ▮

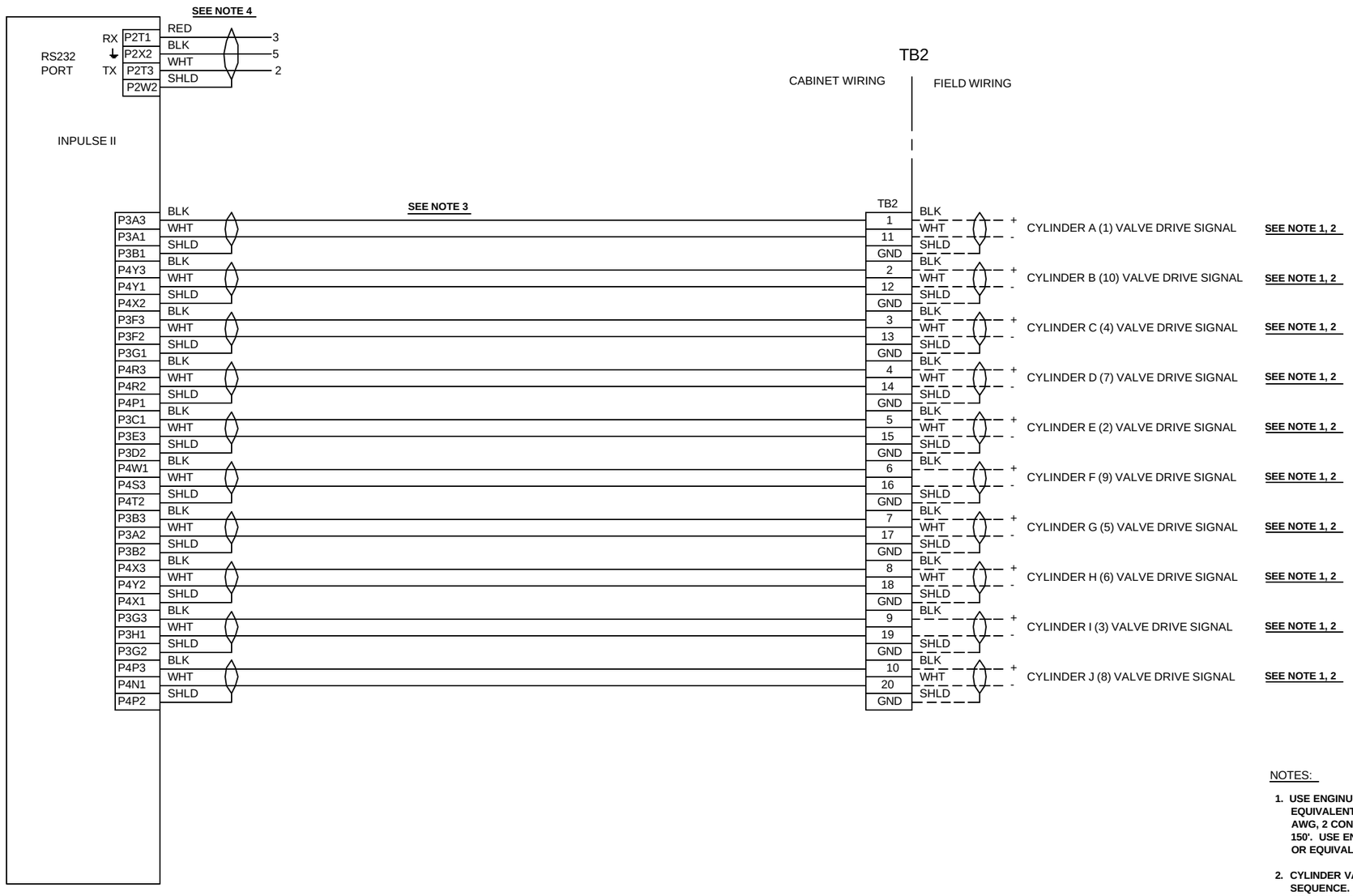

NOTES:

1. USE ENGINUITY P/N 11987,16 AWG 2 CONDUCTOR SHIELDED CABLE OR EQUIVALENT FOR ALL RUNS 100' AND LESS. USE ENGINUITY P/N 12243,14 AWG, 2 CONDUCTOR SHIELDED CABLE OR EQUIVALENT FOR ALL RUNS 100'-150'. USE ENGINUITY P/N 12244, 12 AWG, 2 CONDUCTOR SHIELDED CABLE OR EQUIVALENT FOR ALL RUNS 150'- 250'.
2. CYLINDER VALVE DRIVE SIGNALS ARE WIRED IN FIRING ORDER SEQUENCE. SIGNAL "A" IS THE FIRST CYLINDER TO FIRE, "B" IS THE SECOND AND SO FORTH, IN ALPHABETICAL ORDER UNTIL EACH POWER CYLINDER IS WIRED. THEREFORE, EXTREME CARE MUST BE TAKEN TO ENSURE THE CORRECT FIRING ORDER WHEN WIRING DRIVE SIGNALS.
3. USE ENGINUITY P/N 11987, 16 AWG, 2 CONDUCTOR SHIELDED CABLE.
4. USE ENGINUITY P/N 12246, 20 AWG, 3 CONDUCTOR SHIELDED CABLE.

UNSIGNED DRAWINGS ARE FOR REFERENCE ONLY

☐ PRELIMINARY FOR CUSTOMER REVIEW	APP BY:_____	DATE:_____
☐ ISSUED FOR CONSTRUCTION	APP BY:_____	DATE:_____
☐ AS BUILT	APP BY:_____	DATE:_____
☐ PRELIMINARY FOR SUPPLIER REVIEW	APP BY:_____	DATE:_____
☐ RELEASED FOR PRODUCTION	APP BY:_____	DATE:_____

LEGEND

— — — — — — FIELD WIRING

———— CABINET WIRING

THIS DRAWING OR ANY REPRODUCTION OF IT SHALL NOT BE USED FOR MANUFACTURE, PRODUCTION OR PROCUREMENT WITHOUT THE EXPRESS WRITTEN CONSENT OF ENGINUITY. USE OR REPRODUCTION FOR USE IN A NORMAL MANNER ASSOCIATED WITH GOODS OR SERVICES FURNISHED OR TENDERED BY ENGINUITY IS APPROVED.

ECO #	REV	DATE	DESCRIPTION	APP

REVISION

UNLESS OTHERWISE SPECIFIED DIMENSIONS ARE IN INCHES

TOLERANCES ARE:
.XX=±.01
.XXX=±.005
.XXXX=±.0001
X/X=±1/32
DEGREE=±1°

CAD GENERATED DRAWING DO NOT MANUALLY UPDATE

DO NOT SCALE DRAWING

ENGINUITY

EL PASO NATURAL GAS
UNIT 5A
WORTHINGTON SUTC-10
2 STROKE / DC POWER

CONTROLS AND INSTRUMENTATION

CONTROL WIRING DIAGRAM

DATE 6/24/03	ENGINEERED SH	SIZE / DWG NO: 15276 / REV: 0
	DRAWN DJ	SCALE: NONE / SHEET ■ OF ■

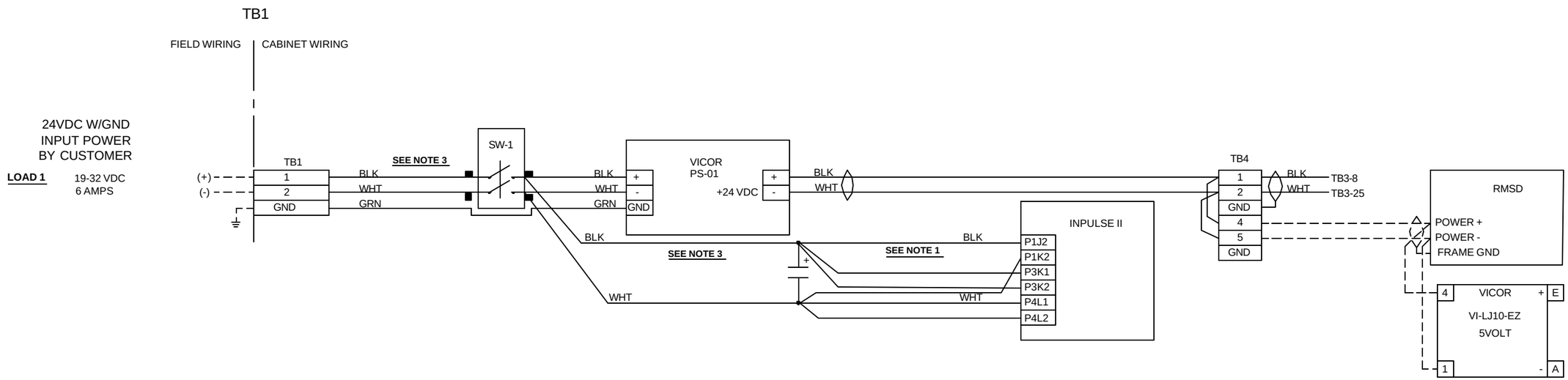

NOTES:

1. **USE 16 AWG, SINGLE CONDUCTOR WIRE, THHN OR MTW.**
2. USE ENGINUITY (P/N 11987) 16 AWG, 2 CONDUCTOR SHIELDED CABLE OR EQUIVALENT, FOR ALL 2 CONDUCTOR RUNS UNLESS SPECIFIED OTHERWISE IN A LOCAL NOTE.
3. **USE 12 AWG, SINGLE CONDUCTOR WIRE, THHN OR MTW.**

UNSIGNED DRAWINGS ARE FOR REFERENCE ONLY

☐ PRELIMINARY FOR CUSTOMER REVIEW	APP BY:_____	DATE:_____	☐ PRELIMINARY FOR SUPPLIER REVIEW	APP BY:_____	DATE:_____
☐ ISSUED FOR CONSTRUCTION	APP BY:_____	DATE:_____	☐ RELEASED FOR PRODUCTION	APP BY:_____	DATE:_____
☐ AS BUILT	APP BY:_____	DATE:_____			

THIS DRAWING OR ANY REPRODUCTION OF IT SHALL NOT BE USED FOR MANUFACTURE, PRODUCTION OR PROCUREMENT WITHOUT THE EXPRESS WRITTEN CONSENT OF ENGINUITY. USE OR REPRODUCTION FOR USE IN A NORMAL MANNER ASSOCIATED WITH GOODS OR SERVICES FURNISHED OR TENDERED BY ENGINUITY IS APPROVED.

LEGEND

— — — — — — FIELD WIRING

———————— CABINET WIRING

ECO #	REV	DATE	DESCRIPTION	APP

REVISION

UNLESS OTHERWISE SPECIFIED DIMENSIONS ARE IN INCHES

TOLERANCES ARE:
X= ±1
.XX= ±.01
.XXX= ±.005
.XXXX= ±.0001
X/Y= ±1/32
DIAM= ±1°

CAD GENERATED DRAWING. DO NOT MANUALLY UPDATE

DATE 6/24/03
DO NOT SCALE DRAWING

ENGINEERED SH
DRAWN DJ

ENGINUITY

EL PASO NATURAL GAS
UNIT 5A
WORTHINGTON SUTC-10
2 STROKE / DC POWER

CONTROLS AND INSTRUMENTATION

CONTROL WIRING DIAGRAM

SIZE | DWG NO: 15276 | REV: 0

SCALE: NONE | SHEET ■ OF ■

ITEM	QTY	DESCRIPTION	MANUFACTURER	PART#
1	8	Terminal Block Marker Strips 1-10, ZBFM 6/WH	Phoenix Contact	08 03 62 1/1-10
2	6	Terminal Block, UK5N	Phoenix Contact	30 04 36 2
3	4	Marker Strip Holder	Phoenix Contact	10 04 34 8
4	8	End Clamp - E/UK	Phoenix Contact	12 01 44 2
5	3	Grounding Terminal Block, USLKG5	Phoenix Contact	04 41 50 4
6	2	Terminal Block End Cover SLKKE	Phoenix Contact	27 70 02 4
7	2	Terminal Block End Cover, UK5N Gray	Phoenix Contact	30 03 02 0
8	4	Terminal Block Marker Strips 11-20, ZBFM 6/WH	Phoenix Contact	08 03 62 1/11-20
9	25	Terminal Block SLKK5 Double Level TB W/GND Foot	Phoenix Contact	04 61 01 8
10	2	Terminal Block Marker Strips 21-30, ZBFM 6/WH	Phoenix Contact	08 03 62 1 / 21-30

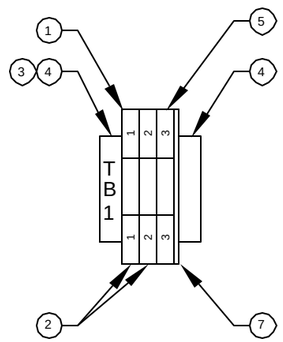

TB-1 DETAIL

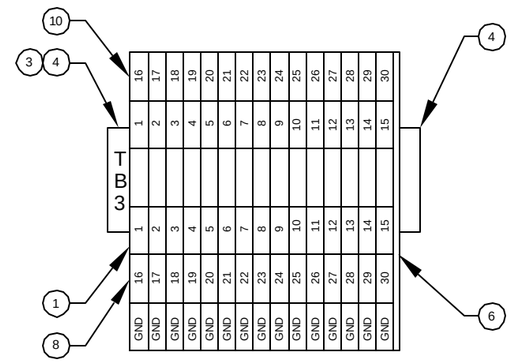

TB-3 DETAIL

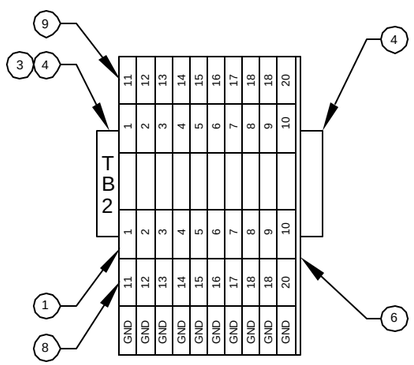

TB-2 DETAIL

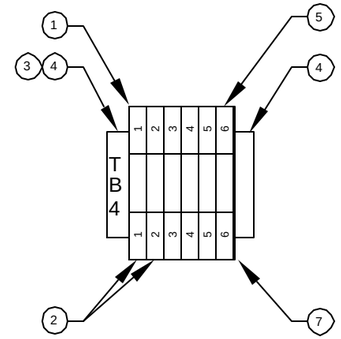

TB-4 DETAIL

UNSIGNED DRAWINGS ARE FOR REFERENCE ONLY

- ☐ PRELIMINARY FOR CUSTOMER REVIEW — APP BY:_____ DATE:_____
- ☐ ISSUED FOR CONSTRUCTION — APP BY:_____ DATE:_____
- ☐ AS BUILT — APP BY:_____ DATE:_____
- ☐ PRELIMINARY FOR SUPPLIER REVIEW — APP BY:_____ DATE:_____
- ☐ RELEASED FOR PRODUCTION — APP BY:_____ DATE:_____

THIS DRAWING OR ANY REPRODUCTION OF IT SHALL NOT BE USED FOR MANUFACTURE, PRODUCTION OR PROCUREMENT WITHOUT THE EXPRESS WRITTEN CONSENT OF ENGINUITY. USE OR REPRODUCTION FOR USE IN A NORMAL MANNER ASSOCIATED WITH GOODS OR SERVICES FURNISHED OR TENDERED BY ENGINUITY IS APPROVED.

LEGEND

- EXISTING PIPING/EQUIPMENT
- NEW PIPING/EQUIPMENT

ECO #	REV	DATE	DESCRIPTION	APP

REVISION

UNLESS OTHERWISE SPECIFIED DIMENSIONS ARE IN INCHES

TOLERANCES ARE:
.XX=±.01
.XXX=±.005
.XXXX=±.0001
X/X=±1/32
DEG=±1°

CAD GENERATED DRAWING DO NOT MANUALLY UPDATE

DATE 6/21/04
DO NOT SCALE DRAWING

ENGINUITY

ENGINEERED SH
DRAWN HM

EL PASO NATURAL GAS
UNIT 5A
WORTHINGTON SUTC-10

MICRO-PILOT DEVELOPMENT

CONTROLS AND INSTRUMENTATION

CABINET LAYOUT

SIZE | DWG NO: 15266 | REV: 0
SCALE: NONE | SHEET ■ OF ■

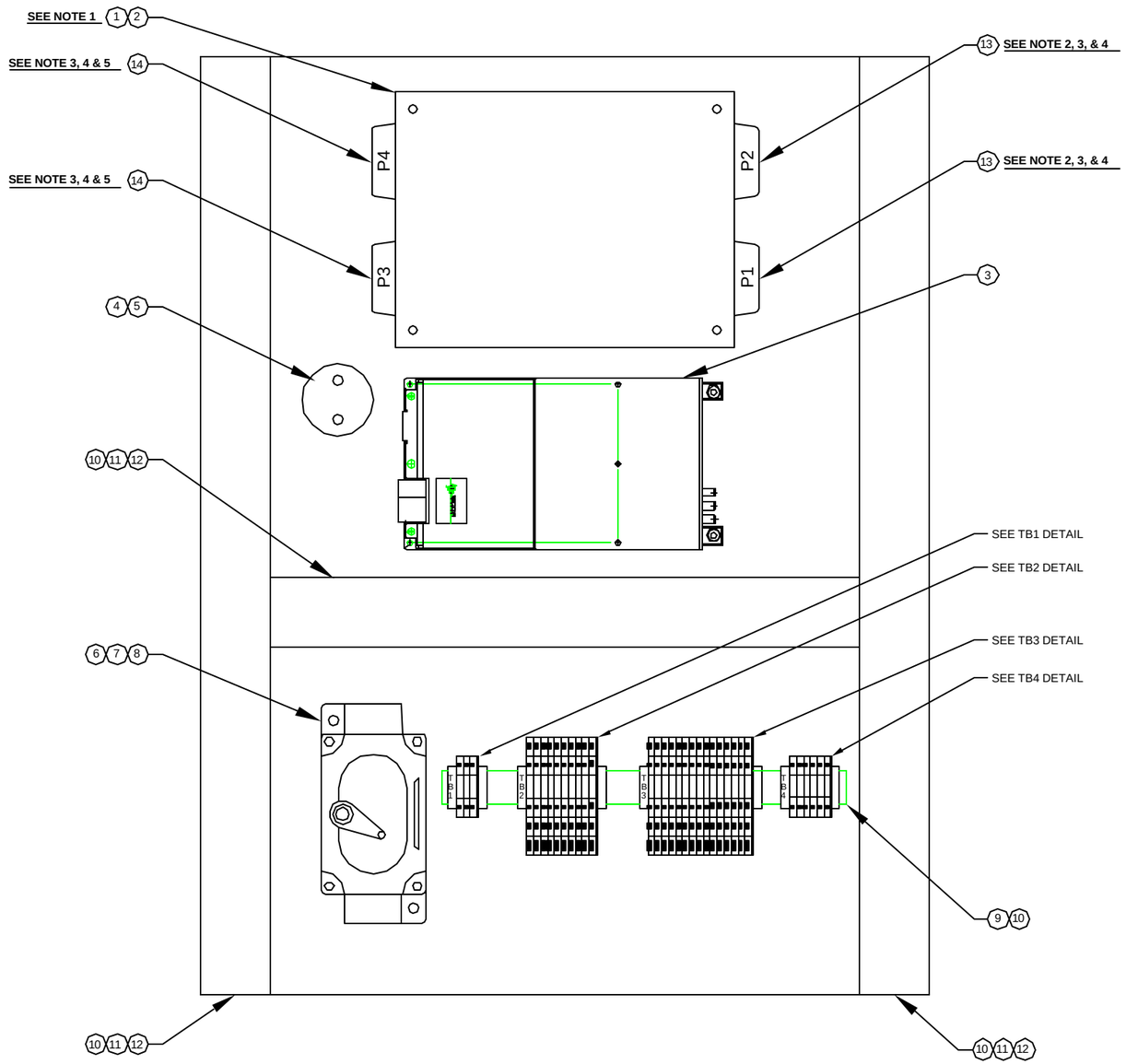

ITEM	QTY	DESCRIPTION	MANUFACTURER	PART#
1	1	INPULSE II	WOODWARD	TBD
2	4	Cap Screw , Hex Head, 1/4"-20 x 2 3/4" Grade 8 Yellow Zinc	Fastenal	15014
3	1	Power Supply 24VDC in 24VDC out 200Watt	Vicor	VI-MC13-CU
4	1	Capacitor	Nippon/Chemi-Con	TBD
5	1	Capacitor Mounting Bracket	GE	TBD
6	2	Cap Screw, Hex Head, 1/4-20 X 1" SAE J429 -Grade 5, Zinc Coated	Fastenal	13005
7	1	Strain Relief, 1/2" NPT, .125-.250 Cable Range	Crouse Hinds	CGB114
8	1	Switch, 2 Pole, Sealed, Explosion Proof, 20 amp, 120 VAC, 1/2" hub	Appleton	EDS118
9	2'	Din Rail, Component Mounting	Square D	9080MH339
10	1	Screw, Thread Cutting, Phillips Pan Head, #10-32 x 1/2 Type 23 Zinc	Fastenal	32353
11	8'	Wire Duct, 2" Wth x 4" Dp x 72" Lg, White Vinyl	Taylor	72040
12	8'	Cover, Wire Duct, 2" Wth x 72" Lg, White Vinyl	Taylor	79020
13	1	Kit, Connector, InPulse II, P1, P2 mate, Pins, Seal Plugs, Removal Tool	Woodward	8928-7039
14	1	Kit, Connector, InPulse II, P3, P4 mate, Pins, Seal Plugs, Removal Tool	Woodward	8928-7040

NOTES:

1. **INSTALL INPULSE II WITH BLACK CONNECTORS ON THE RIGHT.**
2. **INSTALL MATING CONNECTOR 1635-1048 ON P1, 1635-1046 ON P2.**
3. **INSTALL SEALING PLUGS 1223-1078 IN ALL LOCATIONS WITHOUT WIRES.**
4. **USE 8996-2015 TOOL FOR CRIMPING PINS, REMOVAL TOOL INCLUDED IN KIT.**
5. **INSTALL MATING CONNECTOR 1635-1049 ON P3, 1635-1047 ON P4.**

UNSIGNED DRAWINGS ARE FOR REFERENCE ONLY

- ☐ PRELIMINARY FOR CUSTOMER REVIEW — APP BY:_____ DATE:_____
- ☐ ISSUED FOR CONSTRUCTION — APP BY:_____ DATE:_____
- ☐ AS BUILT — APP BY:_____ DATE:_____
- ☐ PRELIMINARY FOR SUPPLIER REVIEW — APP BY:_____ DATE:_____
- ☐ RELEASED FOR PRODUCTION — APP BY:_____ DATE:_____

LEGEND

- EXISTING PIPING/EQUIPMENT
- NEW PIPING/EQUIPMENT

THIS DRAWING OR ANY REPRODUCTION OF IT SHALL NOT BE USED FOR MANUFACTURE, PRODUCTION OR PROCUREMENT WITHOUT THE EXPRESS WRITTEN CONSENT OF ENGINUITY. USE OR REPRODUCTION FOR USE IN A NORMAL MANNER ASSOCIATED WITH GOODS OR SERVICES FURNISHED OR TENDERED BY ENGINUITY IS APPROVED.

ECO #	REV	DATE	DESCRIPTION	APP

REVISION

UNLESS OTHERWISE SPECIFIED DIMENSIONS ARE IN INCHES

TOLERANCES ARE:
.X= ±
.XX= ±.01
.XXX= ±.005
.XXXX= ±.0001
X/Y= 1/16"
DEGREES= ±1°

CAD GENERATED DRAWING. DO NOT MANUALLY UPDATE

DATE 6/21/04
DO NOT SCALE DRAWING

ENGINUITY

ENGINEERED SH
DRAWN HM

EL PASO NATURAL GAS
UNIT 5A
WORTHINGTON SUTC-10

MICRO-PILOT DEVELOPMENT

CONTROLS AND INSTRUMENTATION

CABINET LAYOUT

SIZE | DWG NO: 15266 | REV: 0
SCALE: NONE | SHEET ■ OF ■

ITEM	QTY	DESCRIPTION	MANUFACTURER	PART#
1	1	PANEL	HOFFMAN	TBD
2	10	Nutsert, 1/4-20, Steel	Fastenal	41658
3	9	Nutsert, #6-32, Steel	Fastenal	41652

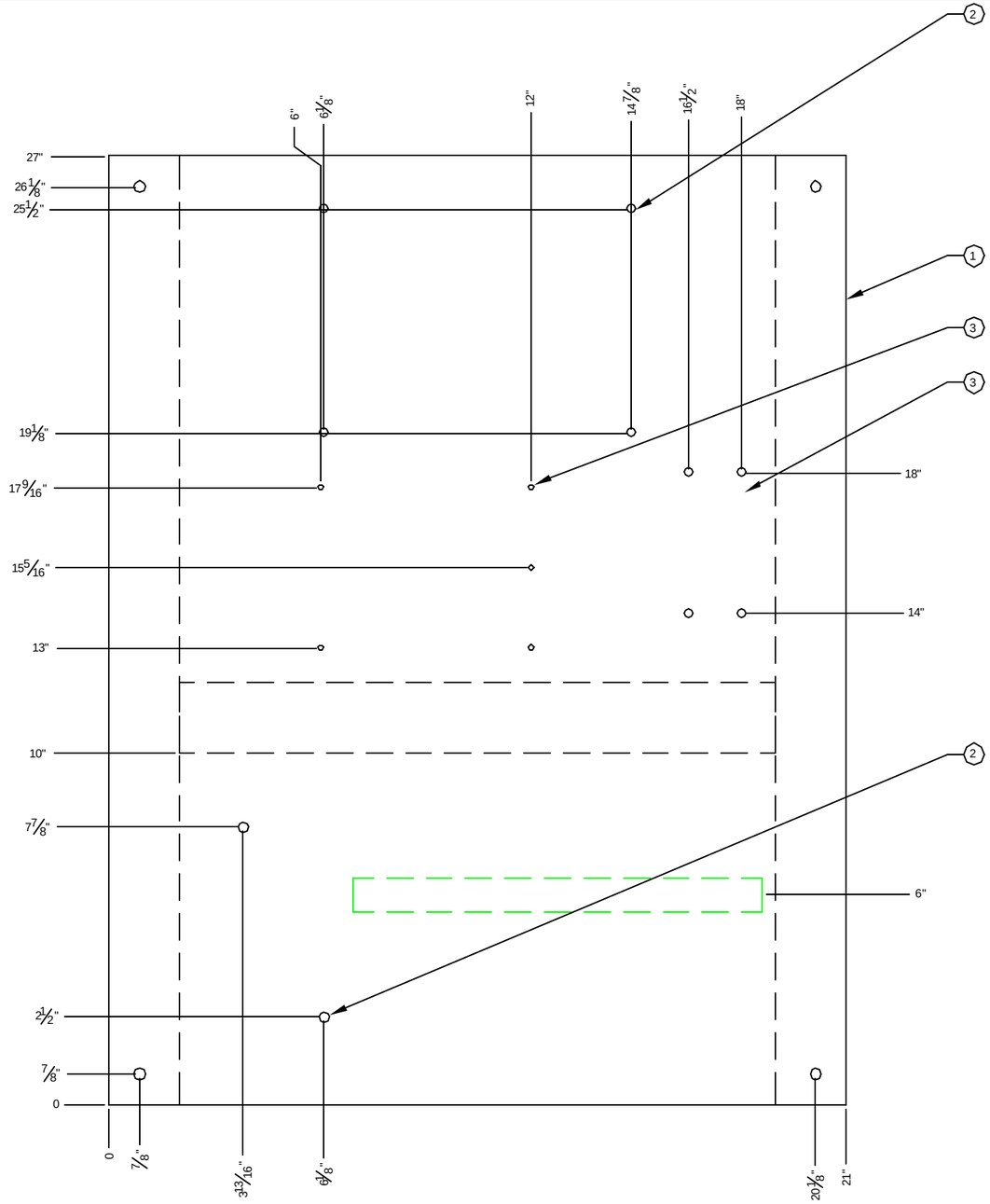

UNSIGNED DRAWINGS ARE FOR REFERENCE ONLY

- ☐ PRELIMINARY FOR CUSTOMER REVIEW — APP BY:_____ DATE:_____
- ☐ ISSUED FOR CONSTRUCTION — APP BY:_____ DATE:_____
- ☐ AS BUILT — APP BY:_____ DATE:_____
- ☐ PRELIMINARY FOR SUPPLIER REVIEW — APP BY:_____ DATE:_____
- ☐ RELEASED FOR PRODUCTION — APP BY:_____ DATE:_____

THIS DRAWING OR ANY REPRODUCTION OF IT SHALL NOT BE USED FOR MANUFACTURE, PRODUCTION OR PROCUREMENT WITHOUT THE EXPRESS WRITTEN CONSENT OF ENGINUITY. USE OR REPRODUCTION FOR USE IN A NORMAL MANNER ASSOCIATED WITH GOODS OR SERVICES FURNISHED OR TENDERED BY ENGINUITY IS APPROVED.

LEGEND

- EXISTING PIPING/EQUIPMENT
- NEW PIPING/EQUIPMENT

ECO #	REV	DATE	DESCRIPTION	APP

REVISION

UNLESS OTHERWISE SPECIFIED DIMENSIONS ARE IN INCHES

TOLERANCES ARE:
X= 1
.XX= .01
.XXX=.005
.XXXX=.0001
X/X= 1/16°
DEG=±1°

CAD GENERATED DRAWING. DO NOT MANUALLY UPDATE

DATE 6/21/04
DO NOT SCALE DRAWING

ENGINUITY

ENGINEERED SH
DRAWN HM

EL PASO NATURAL GAS
UNIT 5A
WORTHINGTON SUTC-10

MICRO-PILOT DEVELOPMENT

CONTROLS AND INSTRUMENTATION

CABINET LAYOUT

SIZE | DWG NO: 15266 | REV: 0

SCALE: NONE | SHEET ■ OF ■

ITEM	QTY	DESCRIPTION	MANUFACTURER	PART#
1	1	Enclosure, 30"x24"x8", Single Door, NEMA 12	Saginaw	SCE-302408LP
2	1	Enginuity White Brass Name Plate	Enginuity	11559
3	2	Lock Nut, Nylon Insert, #10-24 Type NM Zinc Plated	Fastenal	37014

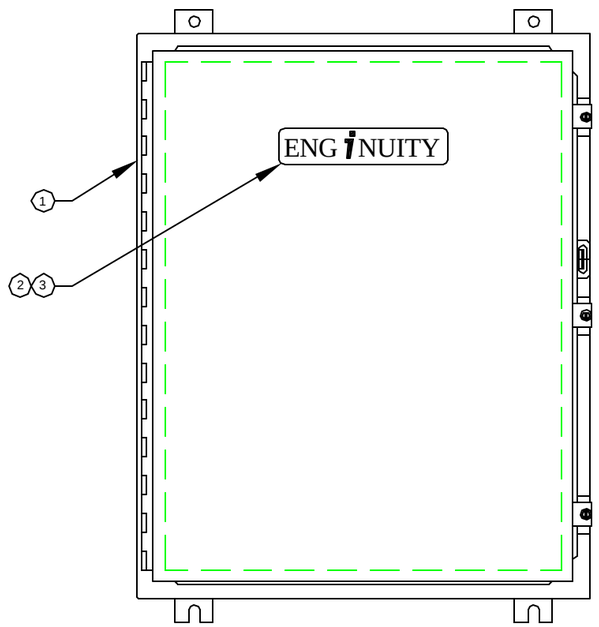

FRONT VIEW

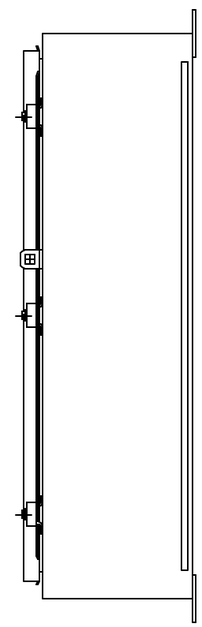

SIDE VIEW

COMPONENTS HIDDEN FOR CLARITY

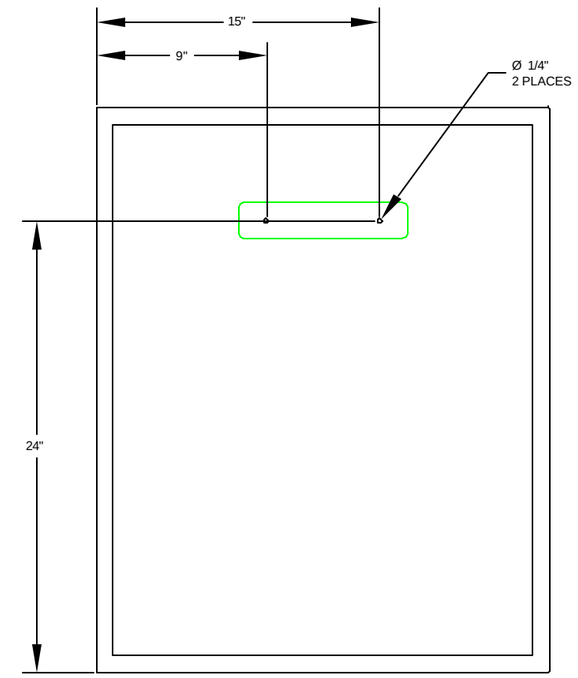

FRONT DOOR LAYOUT

RECOMMENDED LOCATION FOR ENGINUITY NAMEPLATE

UNSIGNED DRAWINGS ARE FOR REFERENCE ONLY

☐ PRELIMINARY FOR CUSTOMER REVIEW	APP BY:_____	DATE:_____
☐ ISSUED FOR CONSTRUCTION	APP BY:_____	DATE:_____
☐ AS BUILT	APP BY:_____	DATE:_____
☐ PRELIMINARY FOR SUPPLIER REVIEW	APP BY:_____	DATE:_____
☐ RELEASED FOR PRODUCTION	APP BY:_____	DATE:_____

LEGEND

EXISTING PIPING/EQUIPMENT

NEW PIPING/EQUIPMENT

THIS DRAWING OR ANY REPRODUCTION OF IT SHALL NOT BE USED FOR MANUFACTURE, PRODUCTION OR PROCUREMENT WITHOUT THE EXPRESS WRITTEN CONSENT OF ENGINUITY. USE OR REPRODUCTION FOR USE IN A NORMAL MANNER ASSOCIATED WITH GOODS OR SERVICES FURNISHED OR TENDERED BY ENGINUITY IS APPROVED.

ECO #	REV	DATE	DESCRIPTION	APP

REVISION

UNLESS OTHERWISE SPECIFIED DIMENSIONS ARE IN INCHES

TOLERANCES ARE:
.X=±1
.XX=±.01
.XXX=±.005
.XXXX=±.0001
X/Y=1/16"
DEG=±1°

CAD GENERATED DRAWING. DO NOT MANUALLY UPDATE

DO NOT SCALE DRAWING

ENGINUITY

DATE	6/21/04
ENGINEERED	SH
DRAWN	HM

EL PASO NATURAL GAS
UNIT 5A
WORTHINGTON SUTC-10

MICRO-PILOT DEVELOPMENT

CONTROLS AND INSTRUMENTATION

CABINET LAYOUT

SIZE	DWG NO:	REV:
	15266	0

SCALE: NONE SHEET ■ OF ■

ITEM	QTY	DESCRIPTION	MANUFACTURER	PART#
1	REF	Conduit Hub, 1" Conduit, Steel	Crouse Hinds	HUB3
2	REF	Conduit Nipple, 1" Conduit X 1 1/2" Close, Steel	Crouse Hinds	1515
3	REF	Expanded Fill Sealing Fitting, 1" Hub	Crouse Hinds	EYSX31
4	REF	Conduit Nipple, 1" Conduit X 2" Short, Steel	Crouse Hinds	1516
5	REF	Condulet Conduit Outlet Elbow, 1"	Crouse Hinds	LBY35
6	REF	Conduit Union, Male, 1"	Crouse Hinds	UNY305

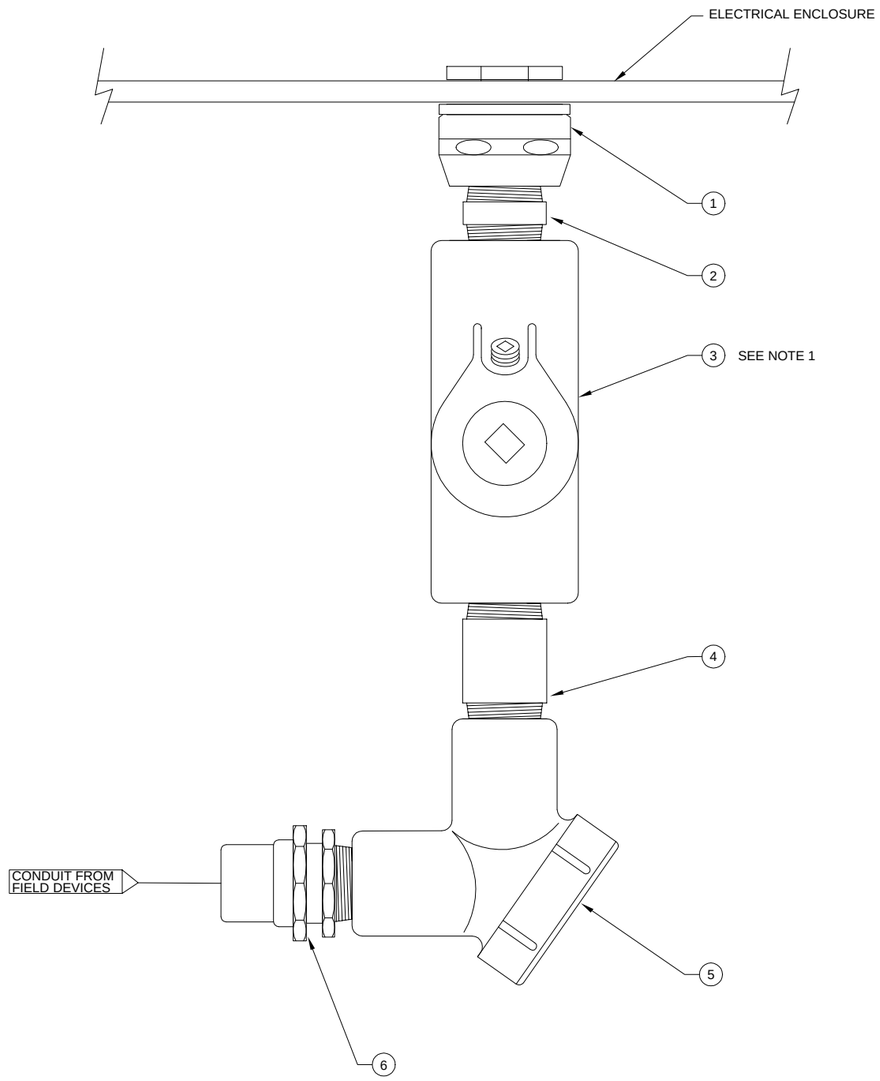

NOTES:

1. INSTALL CHICO X FIBER AND CHICO SEALANT IN SEALING FITTING AFTER ENGINE IS 100 % COMMISSIONED.
2. STANDARD ENTRY FOR TOP, SIDE OR BOTTOM USES.

UNSIGNED DRAWINGS ARE FOR REFERENCE ONLY

- ☐ PRELIMINARY FOR CUSTOMER REVIEW — APP BY:_____ DATE:_____
- ☐ ISSUED FOR CONSTRUCTION — APP BY:_____ DATE:_____
- ☐ AS BUILT — APP BY:_____ DATE:_____
- ☐ PRELIMINARY FOR SUPPLIER REVIEW — APP BY:_____ DATE:_____
- ☐ RELEASED FOR PRODUCTION — APP BY:_____ DATE:_____

THIS DRAWING OR ANY REPRODUCTION OF IT SHALL NOT BE USED FOR MANUFACTURE, PRODUCTION OR PROCUREMENT WITHOUT THE EXPRESS WRITTEN CONSENT OF ENGINUITY. USE OR REPRODUCTION FOR USE IN A NORMAL MANNER ASSOCIATED WITH GOODS OR SERVICES FURNISHED OR TENDERED BY ENGINUITY IS APPROVED.

LEGEND

ECO #	REV	DATE	DESCRIPTION	APP
10265	4	02/04	UPDATED TITLEBLOCK	BM
10152	3	05/03	UPDATED BOM TO STANDARD	JH
10085	2	11/02	REVISED PN ITEM 2	JH
10084	1	10/02	CHANGED QTY'S TO REF	JH

REVISION

UNLESS OTHERWISE SPECIFIED DIMENSIONS ARE IN INCHES

TOLERANCES ARE:
.X=±1
.XX=±.01
.XXX=±.005
.XXXX=±.0001
X/Y=±1/16"
DEGREE=±1°

CAD GENERATED DRAWING, DO NOT MANUALLY UPDATE

DO NOT SCALE DRAWING

ENGINUITY

STANDARD CABINET

ENTRY ASSEMBLY FOR 1" CONDUIT

DATE	12/5/01
ENGINEERED	JH
DRAWN	DJ
SIZE	
DWG NO:	11893
REV:	4
SCALE: NONE	
SHEET 1 OF 1	

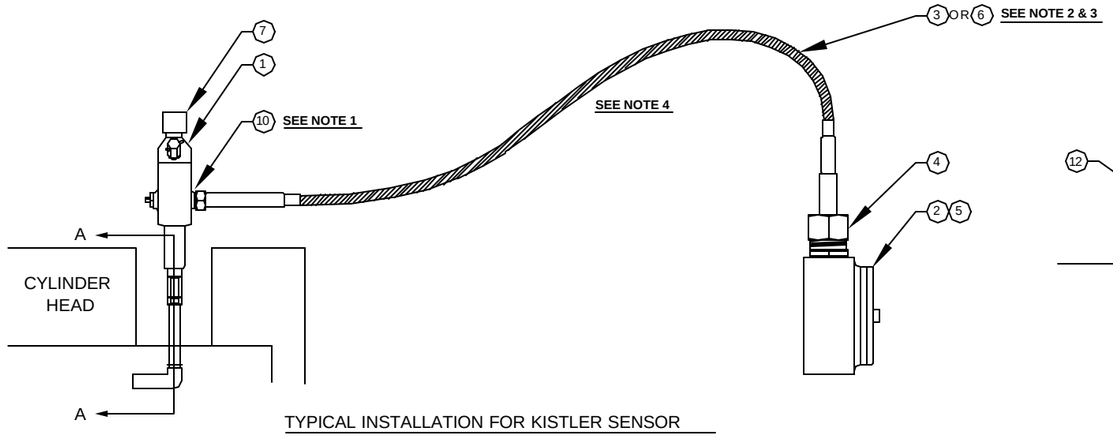

TYPICAL INSTALLATION FOR KISTLER SENSOR

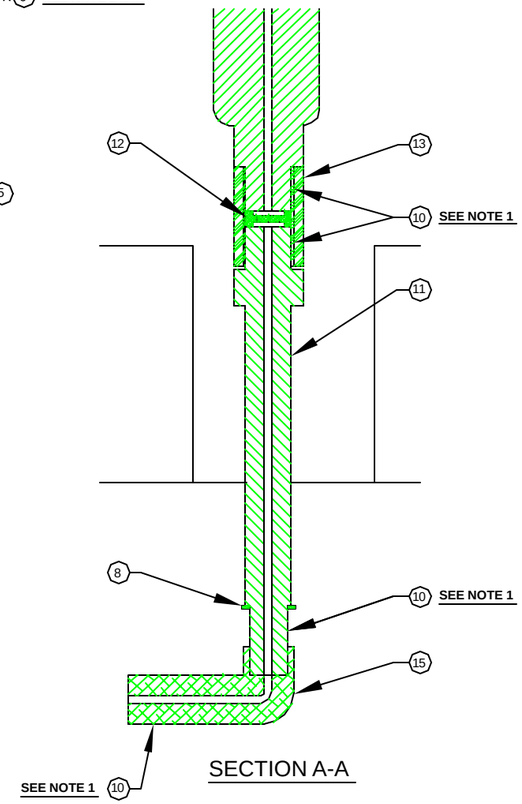

SECTION A-A

SCU CONNECTOR WIRING DIAGRAM

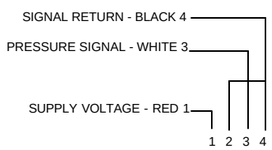

5-PIN FEMALE CONNECTOR WIRING FROM CABINET

1: SUPPLY VOLTAGE, RED
2: JUMPER TO 4
3: PRESSURE SIGNAL, WHITE
4: SIGNAL RETURN, BLACK
5: N/C

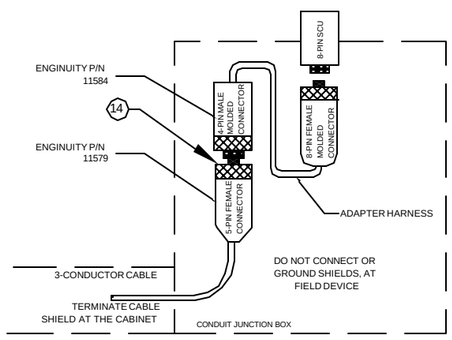

TYPICAL WIRING WHERE OPTIONAL KISTLER SENSOR USED

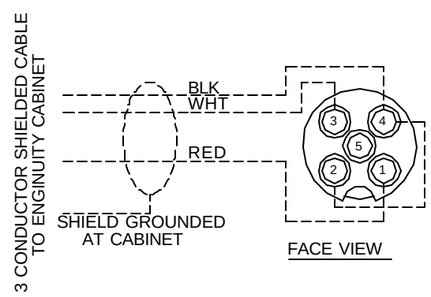

FACE VIEW

ITEM	QTY (REF)	DESCRIPTION	MANUFACTURER	PART#
1	10	Indicator Valve, 3/4-16 thrd	Kiene Diesel	SP-06225
2	10	Adapter Cable, 8 Pin DIN to 5 Pin DIN	Enginuity	11584
3	10	Pressure Sensor - Power Cylinder HTT-01(XF) w/ Seal Washer 0-150	Kistler	TBD
4	10	Compression Fitting	Crouse Hinds	CGB396
5	10	1" FNPT Guat Conduit Tee Body	Crouse Hinds	GUAT36
6	10	Plug, 14mm X 1.25 mm SMV Sensor Port	Kiene Diesel	SP-06042
7	10	POS-I-SEAL Indicator Valve Cap, Steel, with Integral Brass Sealing Plug	Kiene Diesel	AX-17A
8	10	Gasket, TBD	Kiene Diesel	AX-39-9
9	10	Cable Ties	Grainger	1A868
10	1	Loctite Nickel Antiseize	Loctite	77124
11	10	Engine Adapter, TBD	Kiene Diesel	SP-06253-2
12	10	Flame Arrestor, TBD	Kiene Diesel	SP-06236-1
13	10	Nut Connector, TBD	Kiene Diesel	SP-06236-2
14	10	Connector, 5 Pin DIN	Lumberg	RKC-5/9
15	10	Engine Adapter, TBD	Kiene Diesel	SP-06253-1

NOTES:

1. **APPLY ITEM 10, LOCTITE NICKEL ANTI SEIZE, SPARINGLY TO THREADS ON EACH ITEM BEFORE ASSEMBLY. DO NOT ALLOW ANY LOCTITE INTO INTERNAL PASSAGEWAYS.**
2. **TORQUE PRESSURE SENSOR TO KIENE VALVE TO 25 NM. (18 FT-LBS)**
3. **IF KIENE IS TO BE USED DURING ENGINE OPERATION WITHOUT A SENSOR IN PLACE, INSTALL PLUG IN PLACE OF SENSOR. INSTALL PLUG AND OPEN SENSOR SHUTOFF VALVE. FAILURE TO OPEN VALVE WITH PLUG INSTALLED CAN RESULT IN MEASUREMENT ERRORS AND INDICATOR FOULING.**
4. **COIL EXCESS CABLE AND TIE WITH CABLE TIES. ROUTE CABLE TO ENSURE MINIMAL INTERFERENCE WITH MAINTENANCE ACTIVITIES, AND TO AVOID CLOSE PROXIMITY TO ANY OF THE IGNITION SYSTEM COMPONENTS, WIRING OR THE FUEL VALVE WIRING.**

WARNING : YOU MUST INSTALL THE SENSOR ON THE KIENE VALVE **BEFORE** INSTALLATION OF SCU INTO COMPRESSION FITTING TO AVOID DAMAGE TO THE SENSOR. SCU FOUND ON ELECTRONICS END OF SENSOR. VOLTAGE SIGNAL READ BY DATA ACQUISITION EQUIPMENT.

WARNING : WHEN REMOVING THE SENSOR, YOU MUST REMOVE THE SCU FROM THE COMPRESSION FITTING **BEFORE** REMOVING THE SENSOR FROM THE KIENE VALVE TO AVOID DAMAGE TO THE SENSOR.

WARNING : THE UNIT SENSOR SHUTOFF (ISOLATION) VALVE MUST BE CLOSED **BEFORE** REMOVING PRESSURE SENSOR IF AVAILABLE. IF NOT THE UNIT MUST BE SHUT DOWN AND THE COMPRESSOR BLOWN DOWN **BEFORE** A SENSOR CAN BE REMOVED.

UNSIGNED DRAWINGS ARE FOR REFERENCE ONLY

- ☐ PRELIMINARY FOR CUSTOMER REVIEW — APP BY:_____ DATE:_____
- ☐ ISSUED FOR CONSTRUCTION — APP BY:_____ DATE:_____
- ☐ AS BUILT — APP BY:_____ DATE:_____
- ☐ PRELIMINARY FOR SUPPLIER REVIEW — APP BY:_____ DATE:_____
- ☐ RELEASED FOR PRODUCTION — APP BY:_____ DATE:_____

THIS DRAWING OR ANY REPRODUCTION OF IT SHALL NOT BE USED FOR MANUFACTURE, PRODUCTION OR PROCUREMENT WITHOUT THE EXPRESS WRITTEN CONSENT OF ENGINUITY. USE OR REPRODUCTION FOR USE IN A NORMAL MANNER ASSOCIATED WITH GOODS OR SERVICES FURNISHED OR TENDERED BY ENGINUITY IS APPROVED.

LEGEND

ECO #	REV	DATE	DESCRIPTION	APP

REVISION

UNLESS OTHERWISE SPECIFIED DIMENSIONS ARE IN INCHES
TOLERANCES ARE:
.X=±.1
.XX=±.04
.XXX=±.010
.XXX=±.0001
X/X=1/16"
DEGREES=1°
CAD GENERATED DRAWING. DO NOT MANUALLY UPDATE

DATE 7/2/04
DO NOT SCALE DRAWING

ENGINUITY

ENGINEERED HM
DRAWN SH

EL PASO NATURAL GAS
UNIT 5A
WORTHINGTON SUTC-10

iMPACT SYSTEM

SPECIFICATION

iMPACT POWER SIDE SENSOR INSTALLATION

SIZE | DWG No: 15345 | REV: 0
SCALE: NONE | SHEET ■ OF ■

Micropilot Parts List

Updated 7/20/2004

System	Qty	Description	Manufacturer	Part #	Purchased By	Received
Fluid						
	11	1/2" - 3/8" reducing tee	Swagelok	SS-810-3-8-6	Hoerbiger	Yes
	10	3/8" - 1/4" reducing union	Swagelok	SS-600-6-4	Hoerbiger	Yes
	6	1/2" Plug	Swagelok	SS-810-P	Hoerbiger	Yes
	2	3/8" - 1/4" Reducing Tee	Swagelok	SS-600-3-6-4	Hoerbiger	Yes
	1	3/8" Tee	Swagelok	SS-600-3	Hoerbiger	Yes
	2	3/8" Plug	Swagelok	SS-600-P	Hoerbiger	Yes
	30	1/4" Union	Swagelok	SS-400-6	Hoerbiger	Yes
	10	1/8" Hose barb - 1/4" tube stub	Swagelok	SS-2-HC-A-401	Hoerbiger	Yes
	20	1/2" - 1/4" reducing tee	Swagelok	SS-810-3-8-4	Hoerbiger	Yes
	1	1/2" tee	Swagelok	SS-810-3	EECL	Yes
	240'	1/4"x0.035 Coolant jumpers and fuel return jumpers	Tubing		Hoerbiger	Yes
	80'	3/8"x0.035 Fuel Return header	Tubing		Hoerbiger	Yes
	100'	3/8"x0.065 Fuel Supply Jumpers	Tubing		Hoerbiger	Yes
	200'	1/2"x0.035 Coolant headers	Tubing		Hoerbiger	Yes
	100'	1/2"x0.083 Fuel Supply Header	Tubing		Hoerbiger	Yes
	2		Swagelok	SS-600-1-4	Hoerbiger	Yes
	1		Swagelok	SS-810-3-8-6	Hoerbiger	Yes
	2		Swagelok	SS-810-1-16	Hoerbiger	Yes
	10		Swagelok	SS-810-1-8	Hoerbiger	Yes
	1		Swagelok	SS-810-3-8-4, for pressure gauge	Hoerbiger	Yes
	2	SAE#8 male thread to 1/2" Tube	Swagelok	SS-810-1-8ST	Hoerbiger	Yes
	2		Swagelok	SS-810-1-12	Hoerbiger	Yes
	1	8mm to 3/8 reducing union	Swagelok	SS-8M0-6-6	eecl	No
	2	10mm to 1/2 in reducing union	Swagelok	ss-10m0-6-8	eecl	Yes
	2	5/16 to 3/8 in reducing union	Swagelok	ss-600-6-5	eecl	Yes
	4		Swagelok	SS-600-6	Hoerbiger	Yes
	4		Swagelok	SS-810-6	Hoerbiger	Yes
	1		Swagelok	SS-400-P	Hoerbiger	Yes
	3		Swagelok	SS-600-P	Hoerbiger	Yes
	3		Swagelok	SS-810-P	Hoerbiger	Yes
	1		Swagelok	SS-4-TA-7-4	Hoerbiger	Yes
	4	1/2 in Ball Valves	Quadrant	SBRSSRRSLTT050	Hoerbiger	Yes
Electrical						
	100'	1 1/2" Ridgid Steel Conduit	Conduit	Conduit	Directly to Site by Contractor	Yes
	150'	1" Ridgid Steel Conduit	Conduit	Conduit	Directly to Site by Contractor	Yes
	30'	1" Rigid Steel Conduit	Conduit	Conduit	Directly to Site by Contractor	Yes
	10'	1 1/2" Rigid Steel Conduit	Conduit	Conduit	Directly to Site by Contractor	Yes
	8	Conduit Nipple, 1" Conduit x 1 1/2" Close, Steel	Crouse Hinds	1515	Hoerbiger	Yes
	8	Conduit Nipple, 1" Conduit x 2" Short, Steel	Crouse Hinds	1516	Hoerbiger	Yes
	4	Conduit Nipple, 1 1/2" Conduit x 1 3/4" Close, Steel	Crouse Hinds	1529	Hoerbiger	Yes
	4	Conduit Nipple, 1 1/2" Conduit x 3", Steel	Crouse Hinds	1531	Hoerbiger	Yes
	12	Strain Relief, 0.250-0.375 dia, w/ sealing gasket, locknut, bushing, 1" thr	Crouse Hinds	CGB393	Hoerbiger	Yes
	12	Compression Fitting	Crouse Hinds	CGB396	Hoerbiger	Yes
	1	Junction Box, Explosion proof, 8x6x4 style EJB(1) 1" hole each side	Crouse Hinds	EJB684-1-0C-0C-0C-0C	Hoerbiger	No
	1	Kit, Mounting Plate, for EJB style A, B1,B2 boxes 6x8	Crouse Hinds	EJB-MP68	Hoerbiger	No
	8	Expanded Fill Sealing Fitting, 1" Hub	Crouse Hinds	EYSX31	Hoerbiger	Yes
	3	Expanded Fill Sealing Fitting, 1 1/2" Hub	Crouse Hinds	EYSX51	Hoerbiger	Yes
	22	1" fNPT Guat Conduit Tee Body	Crouse Hinds	GUAT36	Hoerbiger	Yes
	2	Condulet Conduit Outlet Box, 1 1/2" Hub 5" Cover Opening, With Cover	Crouse Hinds	GUAT59	Hoerbiger	Yes
	6	Conduit Hub, 1/2" Conduit, Steel	Crouse Hinds	HUB1	Hoerbiger	Yes
	12	Conduit Hub, 1" Conduit, Steel	Crouse Hinds	HUB3	Hoerbiger	Yes
	4	Conduit Hub, 1 1/2" Conduit, Steel	Crouse Hinds	HUB5	Hoerbiger	No
	10	Condulet Conduit Outlet Elbow, 1"	Crouse Hinds	LBY35	Hoerbiger	Yes
	6	Condulet Conduit Outlet Elbow, 1 1/2"	Crouse Hinds	LBY55	Hoerbiger	Yes
	50	Conduit Liner, 1" Polypropylene	Crouse Hinds	LNR3	Hoerbiger	Yes
	100	Conduit Liner, 1 1/2" Polypropylene	Crouse Hinds	LNR5	Hoerbiger	Yes
	8	Conduit Plug, Recessed Head, Rigid, 1"	Crouse Hinds	PLG3M	Hoerbiger	Yes
	8	Conduit Reducer, Explosion Proof, 1 1/2" mNPT x 1" fNPT, Steel	Crouse Hinds	RE53	Hoerbiger	Yes
	16	Conduit Union, Male 1"	Crouse Hinds	UNY305	Hoerbiger	Yes
	7	Conduit Union, Male 1 1/2"	Crouse Hinds	UNY505	Hoerbiger	Yes
	50	Cap Screw, Hex Head, 1/4-20x3 1/4" Long, Yellow Zinc	Fastenal	15016	Hoerbiger	Yes
	4	Cap Screw, Hex Head, 5/16-18x5/8", SAE J429 Grade 8, Zinc Coated	Fastenal	15052	Hoerbiger	Yes
	4	Washer, External Tooth, 5/16", Zinc Plated	Fastenal	33738	Hoerbiger	Yes
	10	Cable Ties, 7.5" Pk 100	Grainger	1A868	Hoerbiger	Yes
	1	Loctite Nickel Antisieze	Loctite	77124	Hoerbiger	Yes
	250'	Cable, 16AWG Twisted Shielded Pair Wire	Raychem	FLDWC1321-16-9/0-9CS3050	Hoerbiger	Yes
	500'	Cable, 16AWG Twisted Shielded pair wire	Raychem	FLDWC1321-16-9/0-9CS3050	Hoerbiger	Yes
	500'	Wire, 3 Conductor, 20 gage shielded, 9/2/0 Conductor Insulation Color	Raychem	FLDWC1331-20-ELC3-9CS3050	Hoerbiger	No
	20	Pipe Support Kit, 1" Pipe	Swagelok	304-S5-PP-16P	Hoerbiger	No
	100	1/4" 20 Nylock Nut	Fastenal	37183	Hoerbiger	Yes
	1	Explosion Proof Enclosures w/ 480V Disconnect	Crouse Hinds	EBMBB	EECL	Yes
	1	15 Amp 3-Pole Circuit Breaker	Square D		EECL	Yes
	1	Relay Timer Analog DIN 4 mode	Digi-Key	Z1140-ND	EECL	Yes
	3	Switch Pb Emergency Stop SPST-NC	Digi-Key	Z1502-ND	EECL	Yes
	3	Emergency Stop Plate 90mm	Digi-Key	Z1556-ND	EECL	Yes
	3	Relay PWR 5A DPDT 24 VDC	Digi-Key	Z182-ND	EECL	Yes
	3	Socket Screwless 4P for MY2	Digi-Key	z2062-ND	EECL	Yes
	1	Hook Up Wire 18 AWG	Digi-Key	C2064L-100-ND	EECL	Yes
	1	Power Supply 24V 1.3 A DIN Rail	Digi-Key	z1184-ND	EECL	Yes
Diesel Skid						
	2	Vibration Isolator	Grainger	5C127	EECL	Yes
	2	Vibration Isolator	Grainger	5C128	EECL	Yes
	1	Cross Check Level	Grainger	6C225	EECL	Yes
Misc						
	30	Copper Heat Tips	Custom Tooling		EECL	Yes
	25	Injector Fittings	John Deere		EECL	Yes
	1	5 HP Motor			EECL	Yes
		Delphi High Pressure Pump	Delphi			Yes
		Delphi Fuel Injector	Delphi			Yes
		Fuel Filter	Delphi			Yes
		Goulds Pump			Hoerbiger	Yes
		Viking Pump			Hoerbiger	Yes
	25	1/4" Anti-Vibration Pipe Clamp	Fastenal	46800	EECL	No
	25	3/8" Anti-Vibration Pipe Clamp	Fastenal	46801	EECL	No
	50	1/2" Anti-Vibration Pipe Clamp	Fastenal	46802	EECL	Yes
	2	1 5/8" x 13/16" Green Strut 10 foot	Fastenal	48071	EECL	Yes
	20	1/2" U-Bolt (8.75" x 10.375") (10pc packages)	Fastenal	42060	EECL	Yes
	3	Orfices			EECL	Yes
	2	Motor Starters	Sepco		Hoerbiger	Yes
	1	Pressure Gauge, 10000psi	EDL Tool and Die		Hoerbiger	Yes

Recently Ordered Parts

Qty.			ETA
1	Relief Valve	H. Lorimer corporation	6/22/2004
2	Accumulators	Advanced Fluid power and M	Shipped directly to Site

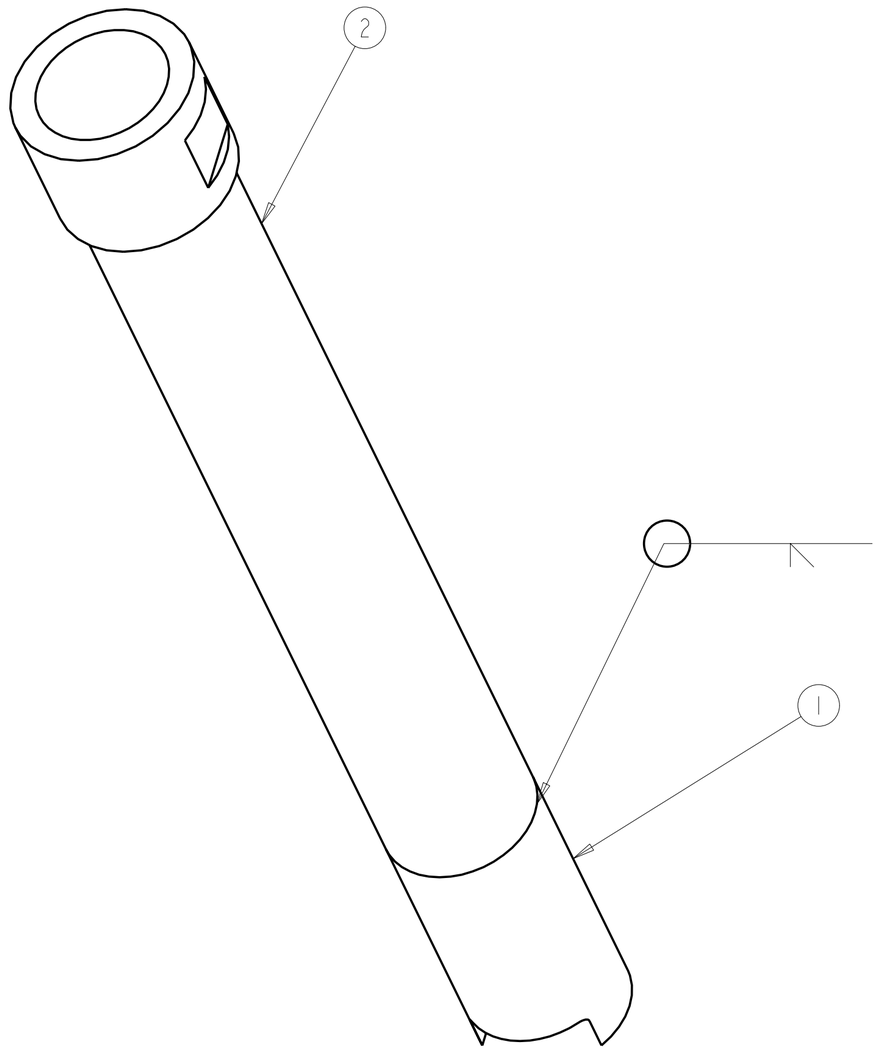

Part Number	Drawing Number	Quantity
1	CJ - 09	1
2	CJ - 10	1

TITLE: Installation Tooling Assembly

SCALE:	DWG #:		LAST REVISED:
1:1	CJ -11		6/21/04
DESIGN: CHASE	DETAIL: CHASE	SHEET: 1 of 1	DRAWN: 6/21/04

CSU ENGINES & ENERGY CONVERSION LAB

APPENDIX 3.4

"Test Plan Document"

Micropilot Ignition Startup Procedure

Location: Window Rock Station, Window Rock, AZ

Start engine on spark plugs.
After suitable warm up period increase speed to rated and load to desired operating level (preferred ~100% load)
Start Micropilot system and set pressure to 3500 psi.
Set Micropilot timing to 12 deg BTDC
Set Micropilot quantity to ~20 μL (1300 μsec duration)
Begin injection
Retard spark timing to around TDC verify engine is still operating normally then retard spark timing to 10 deg ATDC and verify normal operation.
Turn spark ignition off.
Advance micropilot timing until location of peak pressure is at desired position.
Reduce micropilot quantity slowly until performance starts to decline and then increase injection quantity by 20%.

Injection quantity vs. duration given below for 3500 psi

Drive Pulse (μsec)	Quanity(μL) @3500 psi
0	0.0
100	0.0
200	0.0
300	0.2
400	0.6
500	2.0
600	4.2
700	6.4
800	8.7
1000	12.5
1200	18.1
1400	22.7

Design Of Experiments Method of Steepest Ascents Optimization Technique

Objective Function, q:
TMFC = BSFC_ng + 10 BSFC_pilot
q = [BSNOx_act/BSNOx_ref] + 1.5 [TMFC/BSFC_ref]
Goal is to minimize q.

Parameters at Center Point:
micropilot quantity = 1 microliter
pilot fuel pressure = 5000 psi
injection timing = 10 deg BTDC

Increment Definition, Equivalent to +1 in Analysis:
micropilot quantity = 0.25 microliter
pilot fuel pressure = 500 psi
injection timing = 0.5 degree

Reference Values:
BSNOx_ref = 8
BSFC_ref = 10000

Data:	quantity	pressure	timing	NOx	BSFC_ng	BSFC_pil	TMFC	q	quantity vector	pressure vector	timing vector
Center 1	0	0	0	5	9000	50	9500	1.575			
Center 2	0	0	0	5.1	9100	50	9600	1.5975			
Corner 1	-1	-1	-1	8	7500	38	7880	1.788	-0.21925	-0.21925	-0.21925
Corner 2	-1	-1	1	7.5	8000	39	8390	1.7765	-0.20775	-0.20775	0.20775
Corner 3	-1	1	1	4	9300	37	9670	1.467	0.10175	-0.10175	-0.10175
Corner 4	-1	1	-1	6	8500	36	8860	1.636	-0.06725	0.06725	-0.06725
Corner 5	1	1	-1	4.5	9500	62	10120	1.5745	0.00575	0.00575	-0.00575
Corner 6	1	1	1	3	10500	61	11110	1.486	-0.08275	-0.08275	-0.08275
Corner 7	1	-1	1	3.9	9600	63	10230	1.5105	-0.05825	0.05825	-0.05825
Corner 8	1	-1	-1	6.2	7900	62	8520	1.627	0.05825	-0.05825	-0.05825
Center 3	0	0	0	4.9	8990	48	9470	1.5595			
Center 4	0	0	0	4.8	8920	51	9430	1.543			
								Averages-->	-0.05869	-0.067313	-0.04819
								Abvolute Values-->	0.058688	0.067313	0.048188
								Average of All =	0.058063	Multiplier =	17.22282
								Final Vector-->	-1.01076	-1.159311	-0.82992

Procedure
1. Select centerpoint parameters.
2. Select appropriate increments.
3. Take data to complete cube.
4. Enter reference values.
5. Check "stop" criterion.
6. Follow optimization vector until q reaches minimum.
7. Repeat process.

Average Center q = 1.56875
Stand. Dev. Of Center = 0.020089

Average Corner q = 1.608188
Stand. Dev. Of Corners = 0.156315

If 0.020089 is > than 0.156315 stop
Optimum region has has been located.

Optimization Vector

	Quantity	Pressure	Timing	NOx	BSFC_ng	BSFC_pil	TMFC	q
Original Center:	1	5000	10	5	9000	50	9500	1.575
	1.252691	5579.656	10.41496				0	0
	1.505382	6159.311	10.82992				0	0
	1.758073	6738.967	11.24489				0	0
	2.010764	7318.622	11.65985				0	0
	2.263455	7898.278	12.07481				0	0
	2.516146	8477.933	12.48977				0	0

	Boost (" Hg)	Load (%)	Description
Run 1	18	~100	MPI Optimization
Run 2	18	~100	MPI On Spark Off
Run 3	18	~100	MPI + Spark
Run 4	18	~100	MPI On Spark Off
Run 5	16	~100	MPI On Spark Off??
Run 6	18	~100	MPI On Spark Off
Run 7	20	~100	MPI On Spark Off
Run 8	22	~100	MPI On Spark Off
Run 9	24	~100	MPI On Spark Off
Run 10	26	~100	MPI On Spark Off
Run 11	22.5	~110	MPI On Spark Off
Run 12	18.5	~90	MPI On Spark Off
Run 13	16.5	~90	MPI On Spark Off??
Run 14	18	~100	MPI in Front Plug Hole + Spark in rear
Run 15	18	~100	MPI in Front Plug Hole Spark off