# Thermodynamic Analysis of Ammonia-Water-Carbon Dioxide Mixtures for Designing New Power Generation Cycles

Final Report

Reporting Period Start Date: 8/1/98
Reporting Period End Date: 9/30/00

Principal Investigator: Ashish Gupta

January 15, 2003

DOE Award No.: DE-FG2698-FT40109

Chemical Engineering Department
University at Buffalo (SUNY-Buffalo)
Buffalo, NY 14260-4200

**Disclaimer**

This report was prepared as an account of work sponsored by an agency of the United States Government. Neither the United States Government nor any agency thereof, nor any of their employees, makes any warranty, express or implied, or assumes any legal liability or responsibility for the accuracy, completeness, or usefulness of any information, apparatus, product, or process disclosed, or represents that its use would not infringe privately owned rights. Reference herein to any specific commercial product, process, or service by trade name, trademark, manufacturer, or otherwise does not necessarily constitute or imply its endorsement, recommendation, or favoring by the United States Government or any agency thereof. The views and opinions of authors expressed herein do not necessarily state or reflect those of the United States Government or any agency thereof.

**Abstract**

This project was undertaken with the goal of developing a computational package for the thermodynamic properties of ammonia-water-carbon dioxide mixtures at elevated temperature and pressure conditions. This objective was accomplished by modifying an existing set of empirical equations of state for ammonia-water mixtures. This involved using the Wagner equation of state for the gas phase properties of carbon dioxide. In the liquid phase, Pitzer's ionic model was used. The implementation of this approach in the form of a computation package that can be used for the optimization of power cycles required additional code development. In particular, this thermodynamic model consisted of a large set of non-linear equations. Consequently, in the interest of computational speed and robustness that is required when applied to optimization problems, analytic gradients were incorporated in the Newton solver routines. The equations were then implemented using a stream property predictor to make initial guesses of the composition, temperature, pressure, enthalpy, entropy, etc. near a known state. The predictor's validity is then tested upon the convergence of an iteration. It proved difficult to obtain experimental data from the literature that could be used to test the accuracy of the new thermodynamic property package, and this remains a critical need for future efforts in the area. It was possible, however, to assess the feasibility of using this complicated property prediction package for power cycle design and optimization. Such feasibility was first demonstrated by modification of our Kalina cycle optimization code to use the package with either a deterministic optimizer, MINOS, or a stochastic optimizer using differential evolution, a genetic-algorithm-based technique. Beyond this feasibility demonstration, a new approach to the design and optimization of power cycles was developed using a graph theoretic approach.

**Table of Contents** **Page**

Title Page ..... 1

Disclaimer ..... 2

Abstract ..... 3

Table of Contents ..... 4

Executive Summary ..... 5

Experimental ..... 6

Results and Discussion ..... 8

Conclusion ..... 11

References ..... 11

Appendix: "A Graph Theoretic Approach for Hybrid Power Cycle Synthesis" – Presentation at the AIChE Annual Meeting, November 1999 ..... 12 -36

## Executive Summary

The stated goal of this project was to develop a computational package for the prediction of the thermodynamic properties of ammonia-water-carbon dioxide mixtures at elevated temperature and pressure conditions. Three component tasks were identified: (1) the development of a set of equations that would predict thermodynamic properties, (2) coding of these equations and a set of solvers for them, and (3) comparison of the thermodynamic predictions from the resulting computational package to experimental data. It proved possible to extend the scope of the project beyond what was originally proposed: (1) to demonstrate the feasibility of using the package for the optimization of power cycles and (2) to seek new, improved approaches to the design and optimization of power cycles.

This objective was accomplished by modifying an existing set of empirical equations of state for ammonia-water mixtures. This involved using the Wagner equation of state for the gas phase properties of carbon dioxide. In the liquid phase, Pitzer's ionic model was used. The implementation of this approach in the form of a computation package that can be used for the optimization of power cycles required additional code development. In particular, this thermodynamic model consisted of a large set of non-linear equations. Consequently, in the interest of computational speed and robustness that is required when applied to optimization problems, analytic gradients were incorporated in the Newton solver routines. The equations were then implemented using a stream property predictor to make initial guesses of the composition, temperature, pressure, enthalpy, entropy, etc. near a known state. The predictor's validity is then tested upon the convergence of an iteration. It proved difficult to obtain experimental data from the literature that could be used to test the accuracy of the new thermodynamic property package, and this remains a critical need for future efforts in the area. It was possible, however, to assess the feasibility of using this complicated property prediction package for power cycle design and optimization. Such feasibility was first demonstrated by modification of our Kalina cycle optimization code to use the package with either a deterministic optimizer, MINOS, or a stochastic optimizer using differential evolution, a genetic-algorithm-based technique. Beyond this feasibility demonstration, a new approach to the design and optimization of power cycles was developed using a graph theoretic approach.

**Experimental**

The development of the computational package for the prediction of the thermodynamic properties of ammonia-water-carbon dioxide mixtures began with the simpler ammonia-water system. The starting point was a set of empirical equations of state, (1) and (2), developed for the ammonia-water system by Ibrahim and Klein [1].

$$v^l = a_1 + a_2 P + a_3 T + a_4 T^2 \tag{1}$$

$$v^g = \frac{RT}{P} + c_1 + \frac{c_2}{T^3} + \frac{c_3}{T^{11}} + \frac{c_4 P^2}{T^{11}} \tag{2}$$

Phase equilibrium is expressed using equation (3) with the Redlich-Kwong-Soave equation for the fugacity of $NH_3$ and the four suffix Margule's equation for the excess free energy.

$$\varphi_i(T,P)\cdot P\cdot y_i = f_i^{sat}(T)\cdot\gamma_i(T,P,x_i)\cdot x_i\cdot\delta_i; i = NH_3, H_2O \tag{3}$$

The resulting thermodynamic model is highly non-linear and therefore difficult to optimize. For this reason, successive termwise linearization was employed. This begins with an initial guess for a stream state ($T_0$, $P_0$, $x_0$, $w_0$ as a base point). The fugacity coefficient, activity coefficient, Poynting correction factor, saturated fugacity, enthalpy, entropy and volume are then linearized at this base point, e.g. equation (4).

$$\Phi(T,P,x,w) = \Phi_0 + \frac{\partial\Phi_0}{\partial T}(T-T_0) + \frac{\partial\Phi_0}{\partial P}(P-P_0) + \frac{\partial\Phi_0}{\partial x}(x-x_0) + \frac{\partial\Phi_0}{\partial w}(w-w_0) \tag{4}$$

Analytic gradients were also incorporated in the Newton solver for these routines to enhance speed and robustness.

Extending this model to ammonia-water-carbon dioxide mixtures introduced the added complexity of chemical reaction equilibrium in addition to phase equilibrium. Reactions (5) through (9) were determined to be important for this system.

$$NH_3 + H_2O \leftrightarrows NH_4^+ + OH^- \tag{5}$$

$$CO_2 + H_2O \leftrightarrows HCO_3^- + H^+ \tag{6}$$

$$HCO_3^- \leftrightarrows CO_3^{2-} + H^+ \tag{7}$$

$$NH_3 + HCO_3^- \leftrightarrows NH_2COO^- + H_2O \tag{8}$$

$$H_2O \leftrightarrows OH^- + H^+ \tag{9}$$

Thus, reaction and phase equilibrium had to be simultaneously satisfied as given by equations (10) through (12), where the subscript i denotes the species and j denotes the reactions.

$$K_j\left(T\right) = \prod_i a_i^{\nu_{i,j}} \tag{10}$$

$$\phi_w \cdot P \cdot y_w = f_w^{sat} \cdot \gamma_w \cdot \delta_w \cdot x_w \tag{11}$$

$$\phi_i \cdot P \cdot y_i = H_{iw} \cdot \gamma_i \cdot \delta_i \cdot x_i; i = NH_3, CO_2; w = H_2O \tag{12}$$

A truncated virial equation of state was used for the $CO_2$ fugacity coefficient in the vapor phase, as given in equation (13).

$$\log\left\{\phi_{i,gas}\left(T, P, y_j\right)\right\} = \left(2\sum_j y_j B_{ij} - \sum_i \sum_j y_i y_j B_{ij}\right)\frac{P}{RT} \tag{13}$$

Second virial coefficients, Henry's law coefficients and reaction equilibrium constants were taken from Kurz et al. [2]. The Wagner equation of state was used for gas phase $CO_2$ properties. In the liquid phase, Pitzer's model, as modified by Rumpf and Maurer, for the excess free energy, equation (14), was used to treat the ionic species. The binary and ternary interaction terms and the dielectric constant was from Kurz et al.

$$\frac{G^E}{RTn_w M_w} = f_1\left(I\right) + \sum_{(i,j)\neq w} m_i m_j \left(\beta_{i,j}^{(0)} + \beta_{i,j}^{(1)} \cdot f_2\left(I\right)\right) + \sum_{(i,j,k)\neq w} m_i m_j m_k \tau_{i,j,k} \tag{14}$$

As for the ammonia-water system, the model is not suitable for direct implementation for optimization, and consequently it was also modified to incorporate analytical gradients in the Newton solver and to use the linearization approach previously described. (The stream properties are linearized around a given state with the validity being tested once the iteration converges.)

**Results and Discussion**

The predictions of the ammonia-water computational package were compared to thermodynamic data found in the literature and to a NIST database obtained from Dr. Daniel Friend. For the purposes of design, the predictions agreed acceptably well with the experimental data. Unfortunately, for the case of ammonia-water-carbon dioxide systems we were not able to locate appropriate experimental data to validate the thermodynamic model incorporated in the computational package. This remains an important need for future research. Another issue that should be addressed in the future revolves about solids formation; the relevance of carbamate formation should be assessed and if significant, the thermodynamic package should be modified to incorporate it.

Even though it was not possible to validate the thermodynamic model against real experimental data, we still felt it was important to determine whether the use of such a complicated model within an optimization package was feasible for the design and analysis of power cycles. Such feasibility was demonstrated in the following ways. First, the thermodynamic properties package was incorporated within our own Kalina cycle optimization code using both MINOS, a deterministic optimizer, and a stochastic optimizer using differential evolution. In addition, a new graph-theoretic approach to the design and optimization problem was developed incorporating the package. A full description of the optimization and design approaches is beyond present purposes (and the subject of a separate research project), but an abbreviated description will be offered here simply to show that the thermodynamic prediction package can be utilized in such design and optimization efforts. The graph-theoretic approach will be used for this purpose.

Figure 1 shows a representative power cycle. The objective function to be maximized is given in equation (15) where the turbine efficiency is taken to equal 90%, the pump efficiency 70%, the electricity cost factor to be 3000, and the cooling water cost factor to be 200.

$$\max F = \left\{ \begin{matrix} \text{Turbine} \\ \text{Work} \end{matrix} \right\} - \left\{ \begin{matrix} \text{Pumping} \\ \text{Costs} \end{matrix} \right\} - \left\{ \begin{matrix} \text{Hot} \\ \text{Utility} \\ \text{Costs} \end{matrix} \right\} - \left\{ \begin{matrix} \text{Cold} \\ \text{Utility} \\ \text{Costs} \end{matrix} \right\} \tag{15}$$

A stream decomposition approach similar to that used in variable target mass exchange network synthesis is applied. The stream states then define nodes in the graph theoretic approach and the

flowrates define connecting edges. The thermodynamics are then incorporated in the node definition while the detailed process description is used to define the edges such that all possible process configurations are embedded. Feasible node values are initially provided on the basis of process theory and designer insight. The system is then constrained in several ways. Total mass, individual components and energy balances apply at the mixing and split points. Thermodynamic constraints are applied to liquid, vapor and mixed phase streams, as well as second-law thermodynamic constraints. Additionally heat exchanger constraints, power-pressure isentropic turbine relations and pump energy (Bernoulli) equations are applied.

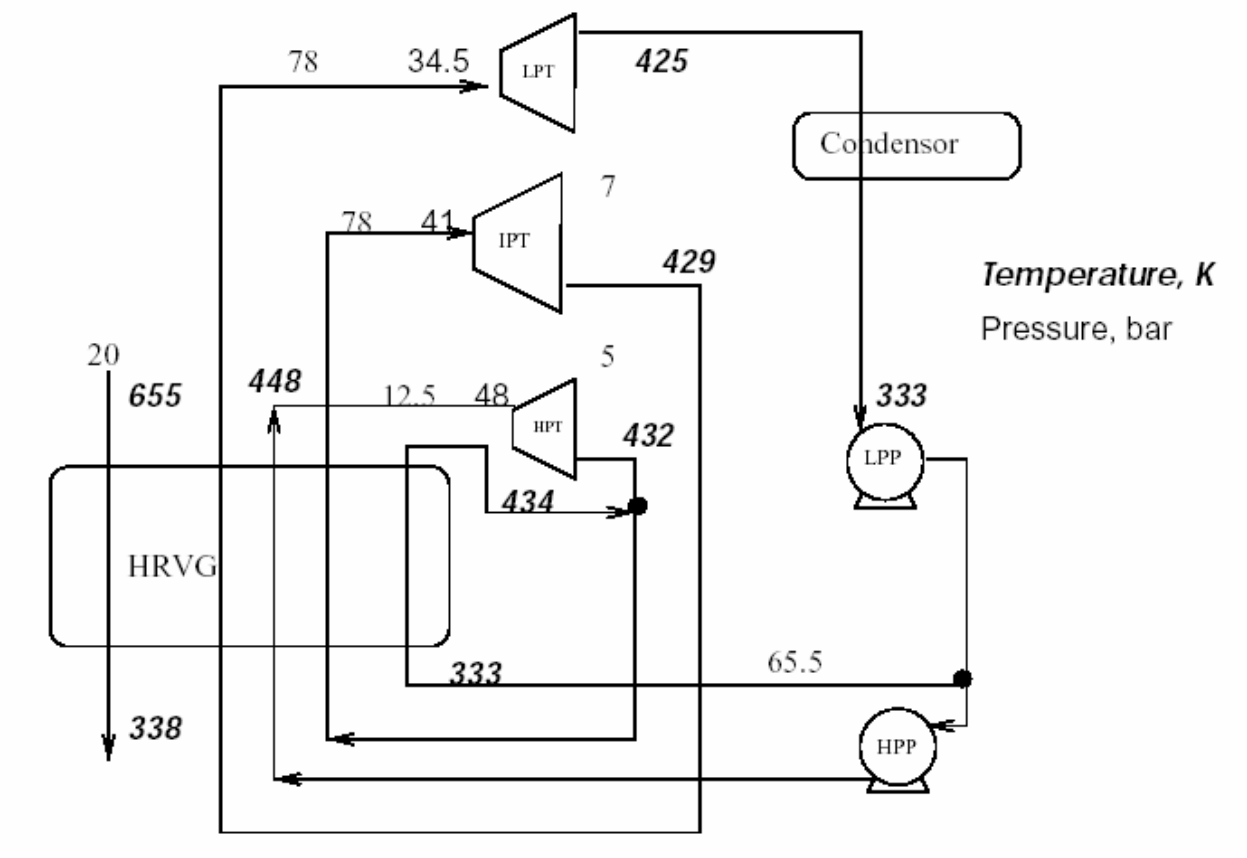


Figure 1. A representative power cycle.

The resulting graph theoretic node diagram corresponding to Figure 1 is shown in Figure 2. It was assumed that only vapor phase streams can enter or leave a turbine, that only liquid phase streams can leave a pump and only streams with equal pressures can mix. The hot gas was assumed to enter at 655 K with FC = 20. The minimum heat exchanger temperature difference was taken to equal 5 K, and the cooling water inlet was assumed to equal 285 K.

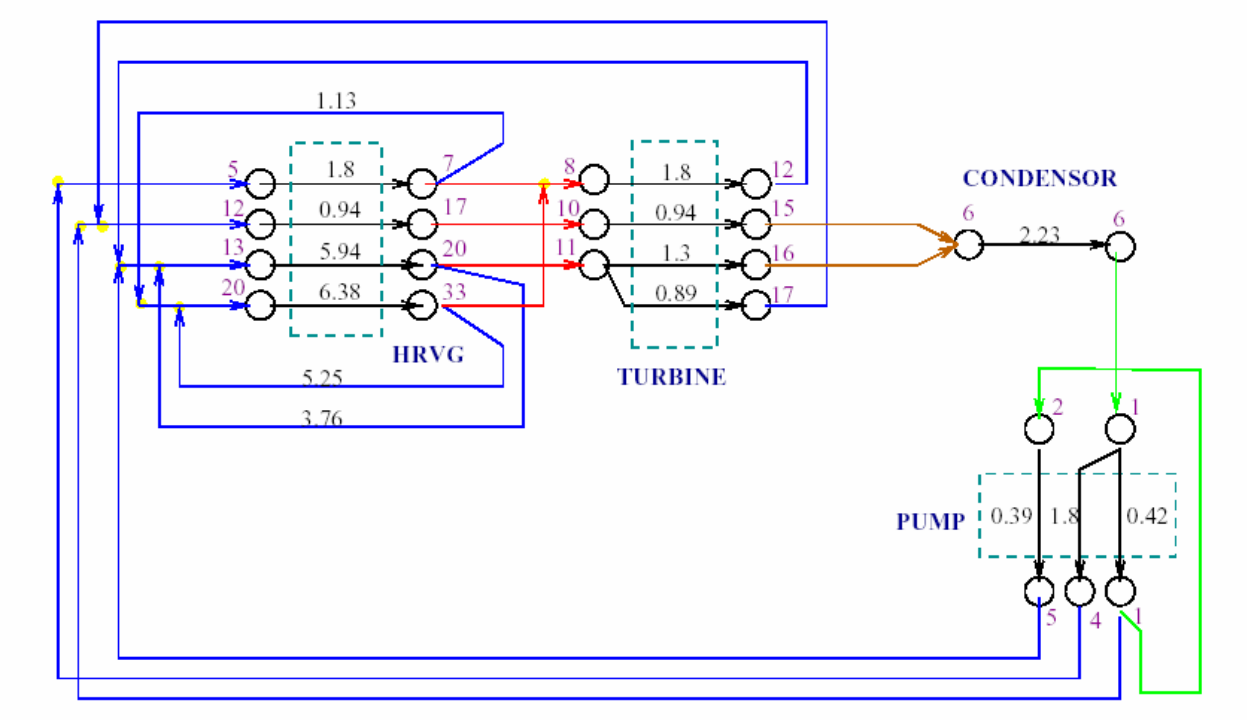


Figure 2. Nodes and connecting edges (see Figure 1).

Systems involving pure water, pure ammonia and mixtures thereof have been analyzed in this way. In fact, Figure 1 represents an optimal power cycle using 90% ammonia as the working fluid that was generated using the graph-theoretic approach. In doing so, both simplex methods and interior point methods were employed and it was found that the interior point method converged faster than the simplex method in the cases examined. More importantly these results demonstrate that it is indeed feasible to incorporate the computational package developed in the current project in power cycle optimization codes.

Hence, the project was successful on all fronts (the predictive package was developed and shown to be a feasible component for process optimization calculations), but with two major caveats. First, while the ammonia-water package has been validated against experimental data, the water-ammonia-carbon dioxide package has not (due to a lack of experimental data). Second,

the package ignores any possibility of solids formation, and if it is demonstrated that materials like carbamates are important components, further modification will be necessary. The package is robust and efficient.

**Conclusion**

A computational package was successfully developed to predict the thermodynamic properties of ammonia-water-carbon dioxide mixtures at conditions characteristic of a bottoming power cycle operating near the critical point. The package was developed to be robust and efficient by incorporating analytical gradients in the Newton solver and by implementing a linearization scheme for the thermodynamic predictions with post-convergence checking. The package was shown to be useful in power cycle design and optimization using MINOS for optimization. It was also incorporated into a new graph-theoretic approach to power-cycle design and optimization, again demonstrating its utility. Unfortunately, an inability to identify appropriate experimental thermodynamic data prevented an assessment of its accuracy, and until such a validation can be performed the utility of the package will be limited.

**References**

[1] Ibrahim, O. M. and S. A. Klein. Thermodynamic Properties of Ammonia-Water Mixtures. ASHRAE Transactions Symposia. CH-93-21-2, pp 1495-1502, 1993.

[2] Kurz, F., R. Rumpf and G. Maurer. "Vapor-Liquid-Solid Equilibria in the System $NH_3$-$CO_2$-$H_2O$ from Around 310 to 470K: New Experimental Data and Modeling." *Fluid Phase Equilibria*, **104**, 261 (1995).

# A Graph Theoretic Approach For Hybrid Power Cycle Synthesis

Kumara Sastry and Ashish Gupta
Process Synthesis Group
Department of Chemical Engineering
University at Buffalo, Buffalo, NY 14260

Funded by the Department of Energy
November 1999
AIChE Annual Meeting, Dallas TX

# Outline

1. Problem Statement
2. Existing Power Cycle Designs
3. Nonlinear Programming Based Approach
4. Graph Theoretic Approach
5. Conclusions

# Problem Statement: Power Cycle Synthesis

We develop here a general approach for power cycle synthesis:

Given a set of waste hot streams and cold utilities with their thermodynamic properties, a working fluid mixture with a thermodynamic model, and a set of unit operations with operating costs, design a power cycle composed of these unit operations and the working fluid that transfers heat from the hot streams to the cold streams thereby generating power at maximum operating profit.

# Existing Power Cycle Designs

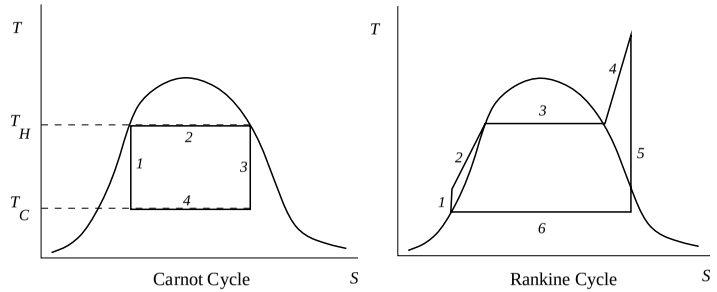


1. **Rankine Cycle**
   - The working fluid is pure water.
2. **Kalina Cycle**
   - Uses $NH_3$-$H_2O$ (binary) mixture as the working fluid.
   - Nonisothermal vaporization (dew point-bubble point gap) decreases the gap between the hot and cold curves.
3. **$NH_3$-$CO_2$-$H_2O$ Cycle**
   - Addition of $CO_2$ to the $NH_3/H_2O$ mixture leads to ionic species that raise the mixture bubble point and lower its dew point.

# Kalina Bottoming Cycle

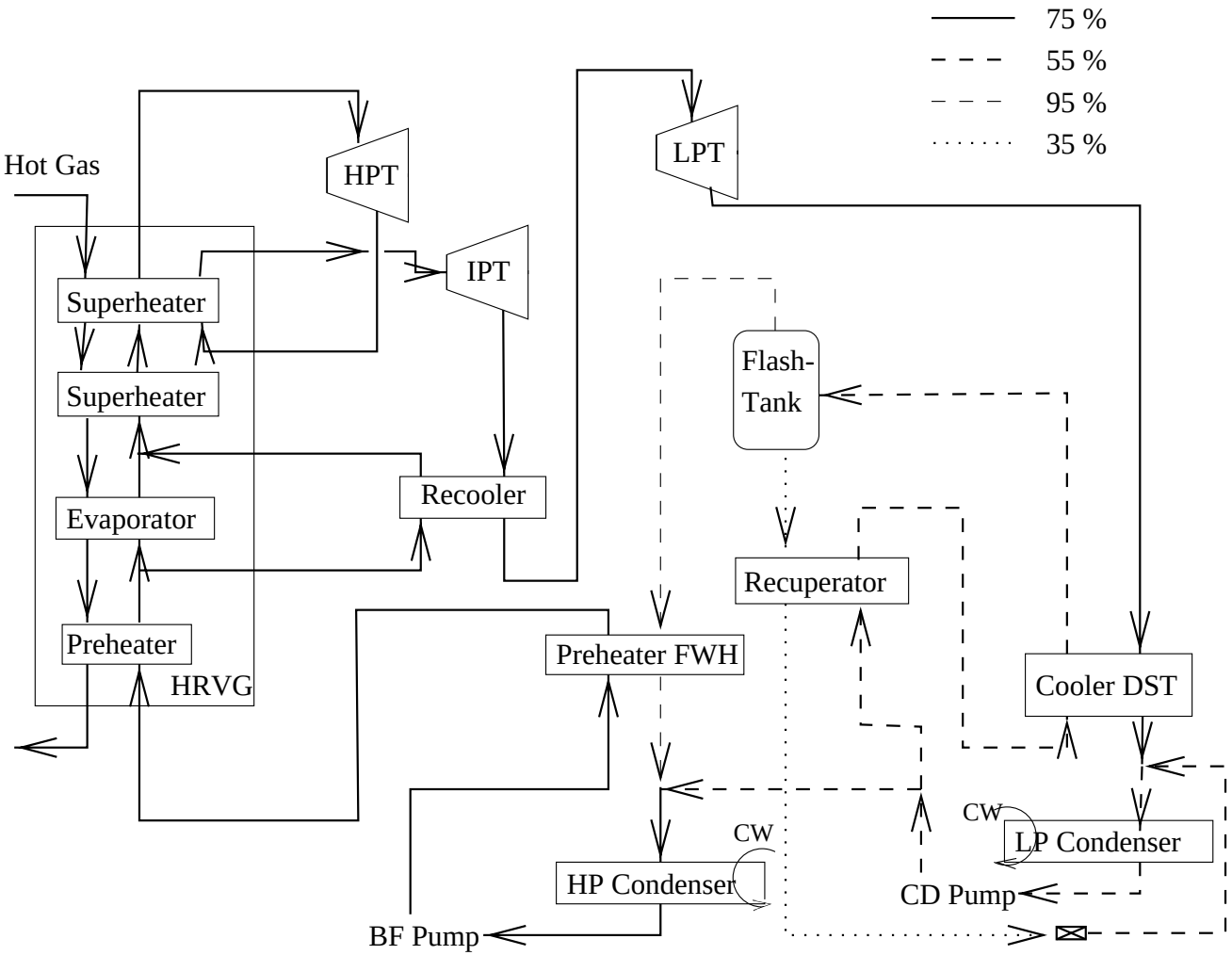

# A Power Cycle with Typical Unit Operations

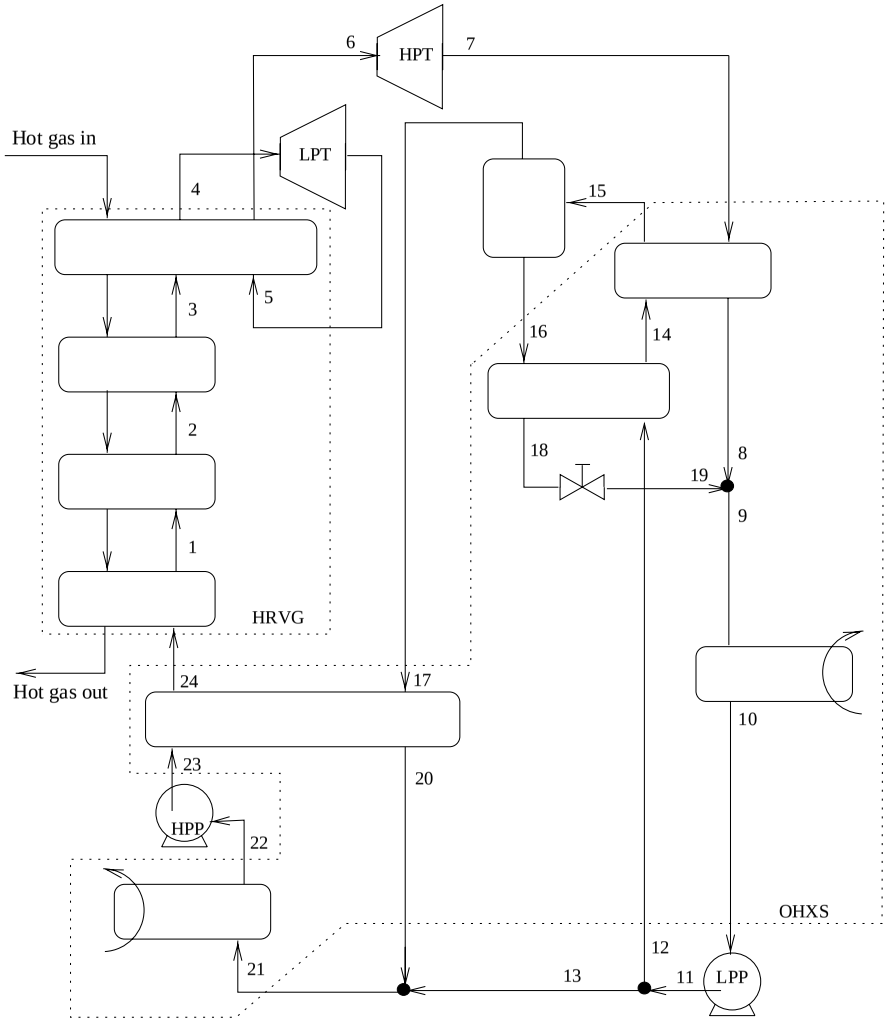

# Objective Function

$$\max \mathcal{F} = \left\{ \begin{array}{l} \text{Turbine} \\ \text{Work} \end{array} \right\} - \left\{ \begin{array}{l} \text{Pumping} \\ \text{Costs} \end{array} \right\} - \left\{ \begin{array}{l} \text{Hot} \\ \text{Utility} \\ \text{Costs} \end{array} \right\} - \left\{ \begin{array}{l} \text{Cold} \\ \text{Utility} \\ \text{Costs} \end{array} \right\}$$

- Turbine efficiency: 90%.
- Pump efficiency: 70%.

# Constraints

- Mass balance, component balance and energy balance at the mixing and split points.
- Liquid, vapor and mixed phase stream constraints
- $2^{\text{nd}}$ law of thermodynamics constraints
- Heat exchanger constraints
- Power-pressure isentropic turbine relations
- Pump energy (Bernoulli) equations

# $NH_3$-$H_2O$ Thermodynamics

$$\phi_i(T,P)\cdot P\cdot y_i \;=\; f_i^{sat}(T)\cdot\gamma_i(T,P,x_i)\cdot x_i\cdot\delta_i, \quad i=\;\mathrm{NH_3},\,\mathrm{H_2O}$$

- Ideal vapor phase mixture
- Redlich-Kwong-Soave equation for fugacity coefficient of $NH_3$
- Empirical equation of states for pure components suggested by Ibrahim & Klein (1993)

$$\begin{aligned} v^l &= a_1 + a_2P + a_3T + a_4T^2 \\ v^g &= \frac{RT}{P} + c_1 + \frac{c_2}{T^3} + \frac{c_3}{T^{11}} + \frac{c_4P^2}{T^{11}} \end{aligned}$$

- Four suffix Margule's equation for the excess free energy
- Robustness of the VLE calculation requires analytical gradients for the nonlinear phase equilibrium equations.

# Successive Termwise Linearization (STL)

- Thermodynamic model is accurate, but highly nonlinear. Difficult to optimize.
- We successively linearize each term in thermodynamics to optimize the design.
- Initial guess for each stream state: $T$, $P$, $x$, $w$: is a base point.
- The properties (terms) linearized at this base point are: Fugacity and activity coefficients, Poynting correction factor, saturated fugacity, enthalpy, entropy, and volume.

Linearization by Taylor series expansion around $T_o$, $P_o$, $x_o$, $w_o$.

$$\Phi(T,P,x,w) = \Phi_o + \frac{\partial \Phi_o}{\partial T}(T - T_o) + \frac{\partial \Phi_o}{\partial P}(P - P_o) + \frac{\partial \Phi_o}{\partial x}(x - x_o) + \frac{\partial \Phi_o}{\partial w}(w - w_o)$$

STL is a general technique that predicts accurately and captures physical insight.

# Results

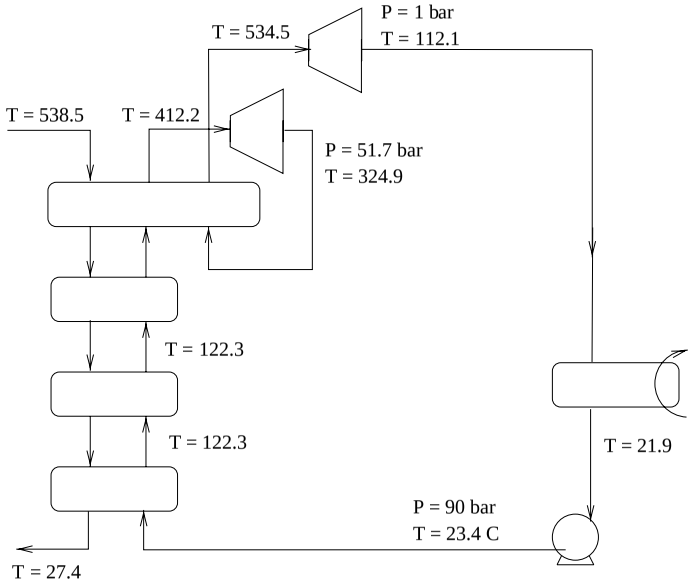


- Developed a systematic approach for hybrid power cycle synthesis.
- $NH_3$-$H_2O$ case study shows:
  - Pure ammonia cycle is the best.
  - Improves profit by three times from pure water cycle.

# Variable Target MEN Synthesis (Gupta & Manousiouthakis(1996))

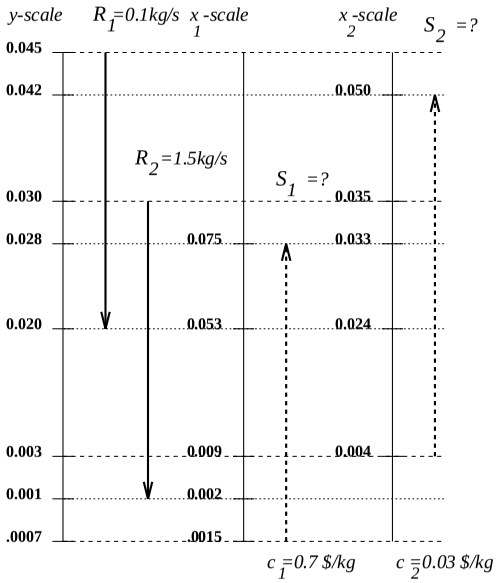


Given a set of rich streams, $R = \{R_i | i = 1,\cdots,N_R\}$, with known flow rates, inlet compositions and upper and lower bounds on target compositions and a set of lean streams and utilities, $S = \{S_j | j = 1,\cdots,N_S\}$, with their costs, inlet compositions and upper bounds on target compositions; determine the minimum utility cost for separation.

# Stream Decomposition

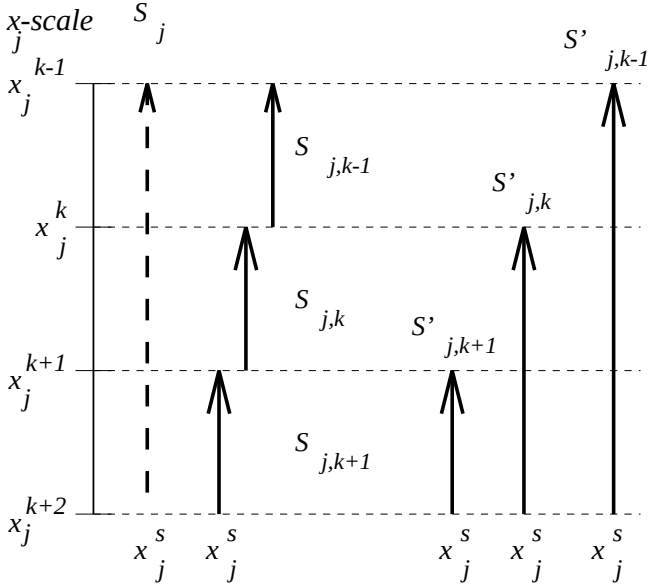


- Variable target MEN synthesis is a nonlinear problem
- Variable target stream has uncountably infinite possible exit compositions. The key is that this stream can be decomposed into:
  - Parallel or serial streams (as many as intervals spanned by the original)
  - Each substream has a fixed target composition: its upper interval edge.

# Graph Theoretic Approach

1. We generalize the stream decomposition approach used in variable target mass exchange network synthesis.
2. Stream states define nodes and flowrates define connecting edges.
3. Accurate thermodynamics can be incorporated easily for node definition.
4. Resulting large convex program provides a tight upper bound to the global optimum.

# Graph Theoretic Approach

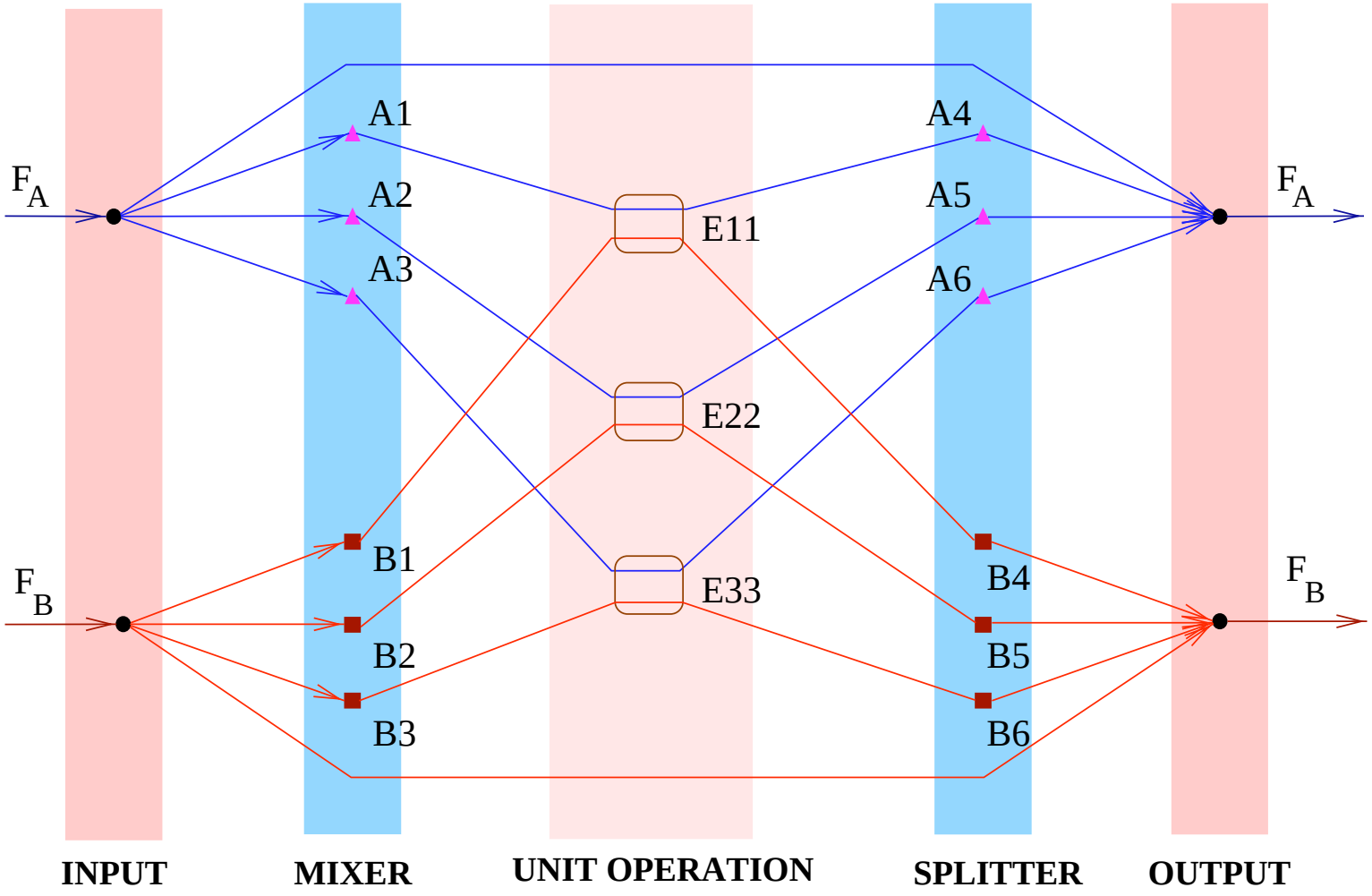

# Graph Theoretic Approach: Assumptions

1. The working fluid can *gain* heat only in the HRVG.
2. The working fluid can *lose* heat only in the condenser.
3. Only vapor phase streams can enter or leave a turbine.
4. Only liquid phase streams can enter or leave a pump.
5. Only streams with equal pressures can mix.

# Graph Theoretic Approach: Results

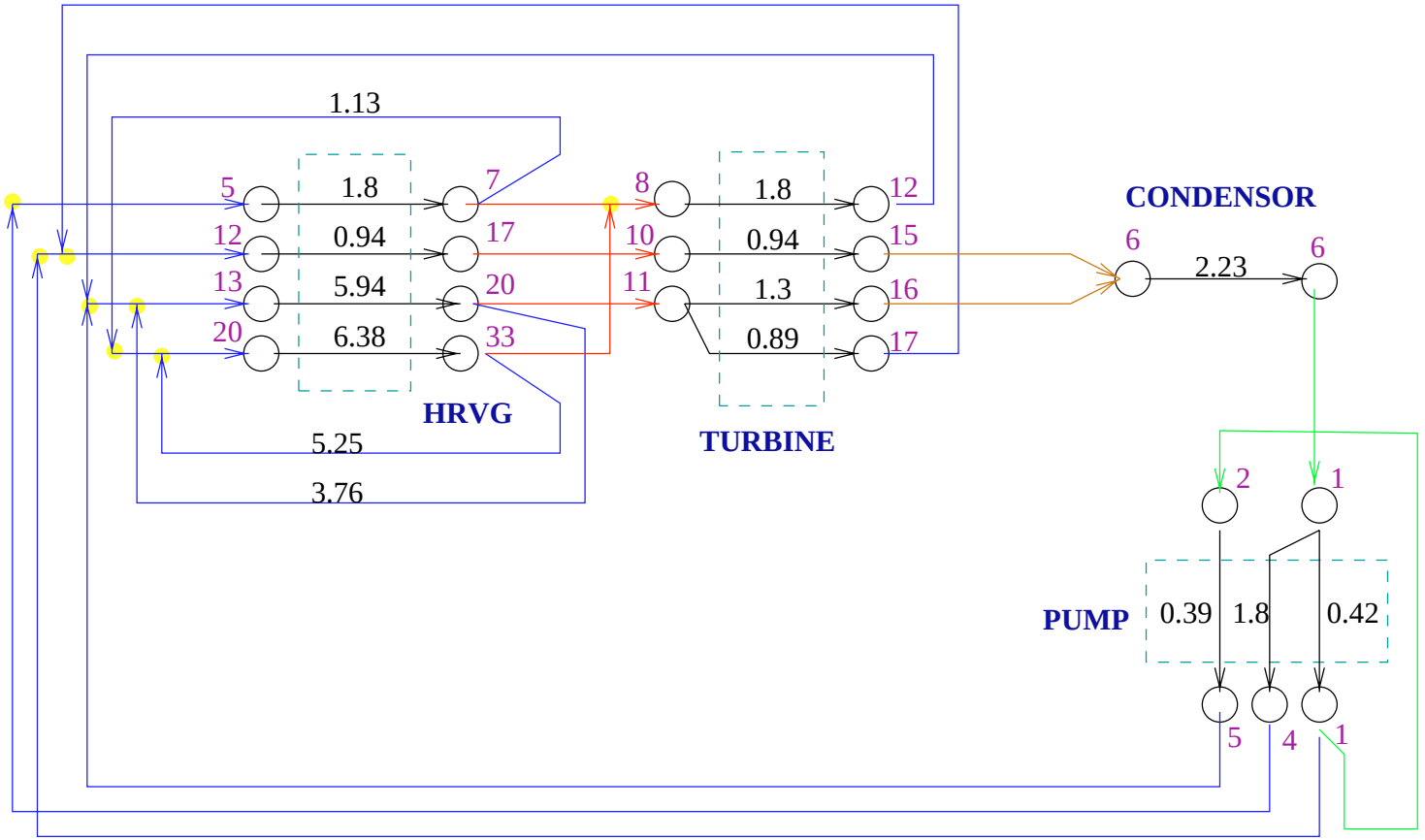


Efficiency: Work done/Heat absorbed = 25.785%

# Graph Theoretic Approach: Results

| | Inlet Node | T(K) | P(bar) | Outlet Node | T(K) | P(bar) |
|---|---|---|---|---|---|---|
| HRVG | 5 | 290 | 100 | 7 | 380 | 100 |
| | 12 | 470 | 31 | 17 | 550 | 31 |
| | 13 | 470 | 54 | 20 | 550 | 54 |
| | 20 | 560 | 100 | 33 | 650 | 100 |
| Turbine: | 8 | 470 | 100 | 12 | 406.1 | 8 |
| | 10 | 550 | 31 | 15 | 411.8 | 8 |
| | 11 | 550 | 54 | 16 | 357.1 | 8 |
| | | | | 17 | 496.5 | 31 |
| Condenser: | 6 | 370 | 8 | 6 | 290 | 8 |
| Pump: | 1 | 290 | 8 | 1 | 290 | 31 |
| | 2 | 290 | 31 | 4 | 290 | 100 |
| | | | | 5 | 290 | 54 |

# Graph Theoretic Approach: Results

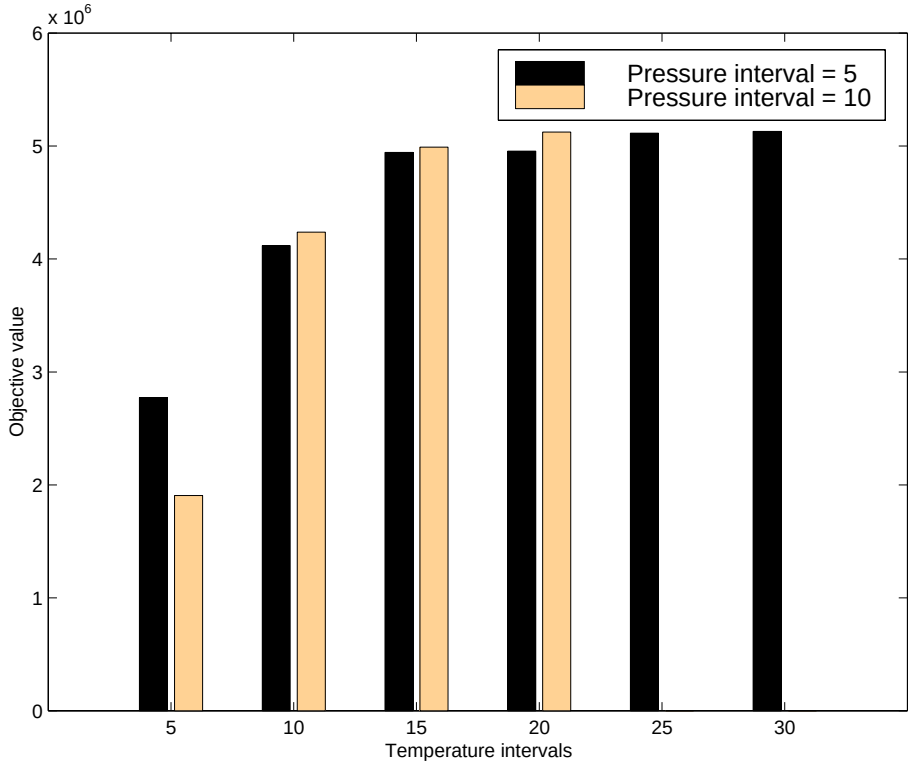


1. Hot gas properties: $T_{in}$ = 650 K, $FC_{pg}$ = 20.0.
2. Minimum temperature difference: 5 K
3. Cooling water inlet temperature = 285 K

# Graph Theoretic Approach: Results

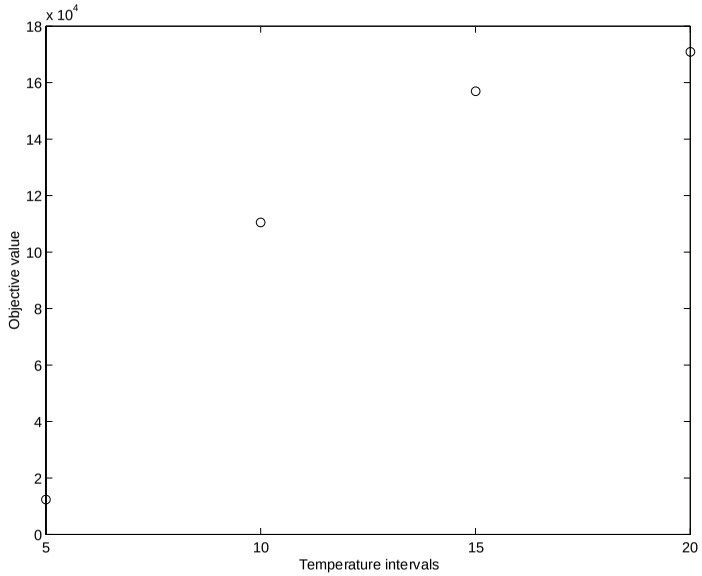


1. Hot gas properties: $T_{in}$ = 455 K, $FC_{pg}$ = 10.0.
2. Minimum temperature difference: 10 K
3. Cooling water inlet temperature = 286 K
4. Objective value(Ibrahim *Energy* **21**(10).1996.): $1.198 \times 10^5$
5. Objective value obtained by Graph Theoretic Approach : $1.709 \times 10^5$

## Graph Theoretic Approach: Results

1. Used both simplex method (MINOS) and interior point method (PCx).
2. PCx converges faster than MINOS.

| Constraints | Variables | PCx CPU Time(s) | MINOS CPU Time(s) | PCx Iterations | MINOS Iterations |
|---|---|---|---|---|---|
| 429 | 2704 | 0.72 | 1.0 | 19 | 1262 |
| 1390 | 20352 | 29.82 | 44.83 | 26 | 12375 |
| 2463 | 39029 | 161.56 | 223.5 | 31 | 28947 |
| 2222 | 51630 | 164.95 | 346.96 | 31 | 40354 |
| 3570 | 116737 | 870.66 | 2321.92 | 35 | 115459 |
| 5231 | 220882 | 5625.91 | 8674.66 | 65 | 215862 |

# Conclusions

1. The task of designing an optimal power cycle leads to a nonlinear programming problem.
2. We formulated this task to consider ammonia-water mixture as the working fluid.
3. To rigorous thermodynamics used were simplified by sequential termwise linearization.
4. Created a novel graph theoretic approach for process synthesis that permits the calculation of tight global lower bounds for nonconvex problems.
5. A pure ammonia cycle outperforms mixed fluid bottoming cycles.
6. The global optimum for a pure ammonia cycle increases profit by 43%.

# $NH_3$-$CO_2$-$H_2O$ Thermodynamics

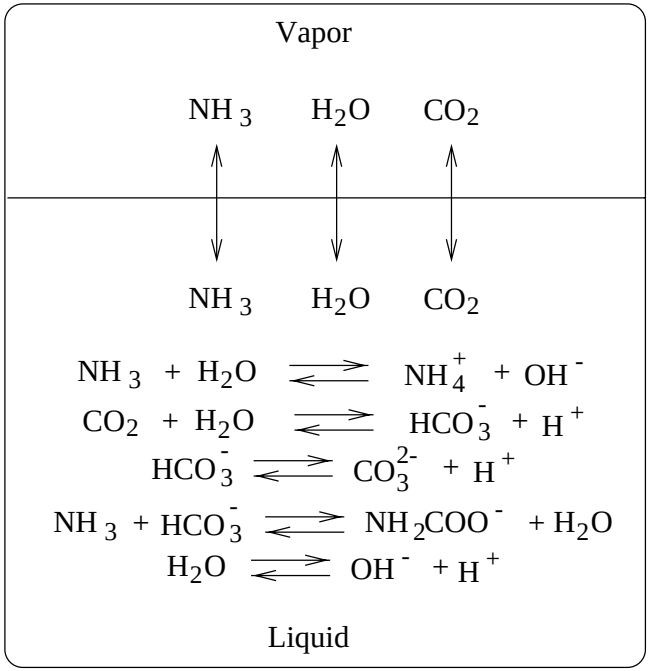


- Reaction equilibrium and phase equilibrium have to solved simultaneously.

$$
\begin{aligned}
K_R(T) &= \Pi_i a_i^{\nu_{i,R}}, \quad R = 1, \cdots, 5 \\
\phi_w \cdot P \cdot y_w &= f_w^{sat} \cdot \gamma_w \cdot \delta_w \cdot x_w \\
\phi_i \cdot P \cdot y_i &= H_{iw} \cdot \gamma_i \cdot \delta_i \cdot x_i, \quad i = \mathrm{NH_3}, \mathrm{CO_2}
\end{aligned}
$$

# $NH_3$-$CO_2$-$H_2O$ Thermodynamics

- Truncated virial equation of state for $CO_2$ fugacity coefficient in vapor phase.

$$\log \phi_{i,gas}(T, P, y_j) = \left( 2 \sum_j y_j B_{ij} - \sum_i \sum_j y_i y_j B_{ij} \right) \frac{P}{RT}$$

- Second virial coefficients, Henry's constants, and reaction equilibrium constants from Kurz et al.
- Pitzer's model for the excess free energy.

$$\frac{G^E}{RTn_w M_w} = f_1(I) + \sum_{(i,j)\neq w} m_i m_j \left( \beta_{i,j}^{(0)} + \beta_{i,j}^{(1)} f_2(I) \right) + \sum_{(i,j,k)\neq w} m_i m_j m_k \tau_{i,j,k}$$

- Binary and ternary interaction terms and dielectric constant from Kurz et al.
- Solid formation (carbamate) needs to be incorporated.
- Available experimental data is limited.

# References


1. Ibrahim, O.M, S.A. Klein. Thermodynamic Properties of Ammonia-Water Mixtures. *ASHRAE Transactions Symposia*. CH-93-21-2. 1993. 1495–1502.

2. Kurz, F., R. Rumpf, G. Maurer. Vapor-Liquid-Solid Equilibria in the System $NH_3$-$CO_2$-$H_2O$ from Around 310 to 470 K: New Experimental Data and Modeling. *Fluid Phase Equilibria*. **104**. 1995. 261–275.

3. Kalina, A.I. *Generation of Energy by Means of a Working Fluid and Regeneration of a Working Fluid*. US Patent No. 4,346,561, 1982.

4. Drnevich, R. *Thermodynamic Power Generation System Employing a Three Component Working Fluid*. US Patent No. 5,557,936. 1996.