Final Report

Covering Period 10/1/2008 through 9/30/2010
Date of Report 12/31/2010

Kevin B. Fogash – Principal Author

Award Number:	DE-NT0005309
Project Title:	Flue Gas Purification Utilizing SOx/NOx Reactions During Compression of CO_2 Derived from Oxyfuel Combustion
Project Period:	10/01/2008 thru 09/30/2010
Recipient Organization:	Air Products and Chemicals, Inc. 7201 Hamilton Blvd. Allentown, PA 18195
Recipient Project Director:	Kevin B. Fogash Air Products and Chemicals, Inc. 7201 Hamilton Blvd. Allentown, PA 18195 Phone (610)481-6174 Fax (610)481-6748 Email: fogashkb@airproducts.com
Recipient Business Officer:	Gregory H. Daub Air Products and Chemicals, Inc. 7201 Hamilton Blvd. Allentown, PA 18195 Phone (610)481-1201 Fax (610)481-2576 Email: daubgh@airproducts.com
DOE Project Officer:	Timothy Fout Phone (304) 285-1341 Email: timothy.fout@netl.doe.gov
DOE Award Administrator:	Mary Beth Jackline-Pearse Phone (412) 386-4949 Email: pearse@netl.doe.gov

ACKNOWLEDGMENT

This material is based upon work supported by the Department of Energy's National Energy Technology Laboratory under Award Number DE-NT0005309.

DISCLAIMER

This report was prepared as an account of work sponsored by an agency of the United States Government. Neither the United States Government nor any agency thereof, nor any of their employees, makes any warranty, express or implied, or assumes any legal liability or responsibility for the accuracy, completeness, or usefulness of any information, apparatus, product, or process disclosed, or represents that its use would not infringe privately owned rights. Reference herein to any specific commercial product, process, or service by trade name, trademark, manufacturer, or otherwise does not necessarily constitute or imply its endorsement, recommendation, or favoring by the United States Government or any agency thereof. The views and opinions of authors expressed herein do not necessarily state or reflect those of the United States Government or any agency thereof.

TABLE OF CONTENTS

Abstract 4

1.0 Executive Summary 5

1.1 Overview 6

1.2 Background 6

1.2.1 Current Technology for Oxyfuel CO_2 Purification 8
1.2.2 NOx, SOx and Hg *removal* in Oxyfuel combustion 10
1.2.3 Oxygen Removal from CO_2 and Other Process Improvements 12
1.2.4 The Power, Recovery and Purity Trade-off in CO_2 Purification 13
1.2.5 Improvement over Competing and Emerging Technologies 14
1.2.6 Integrated Technology/Power Plant Design Considerations 16

2.0 Overall Project Plan 16

2.1 Technical Approach and Understanding 16

2.2 Work Scope 19

2.3 Statement of Program Objectives (SOPO) 20
Phase 1 (Tasks 1 - 3) 20

Phase 2 (Tasks 4, 5) 21

3.0 Results and Discussion 21

3.1 Phase 1 Task 1: Project Management, Planning and Reporting 21

3.2 Phase 1 Task 2: Design and Construction of Reactor System for Purification of CO_2 from Oxy-Coal Combustion 21

3.3 Phase 1 Task 3: Evaluate Reactor Performance for Purification CO_2 from Oxy-Coal Combustion 27

3.4 Phase 2 Task 4: Evaluate Robustness of Reactor Performance for Purification CO_2 from Oxy-Coal Combustion 29

3.5 Phase 2 Task 5: Model the Reactor Performance. 32

4.0 Conclusions 34

5.0 Bibliography and References 35

6.0 Acknowledgements 36

ABSTRACT

The United States wishes to decrease foreign energy dependence by utilizing the country's significant coal reserves, while stemming the effects of global warming from greenhouse gases. In response to these needs, Air Products has developed a patented process for the compression and purification of the CO_2 stream from oxyfuel combustion of pulverized coal. The purpose of this project was the development and performance of a comprehensive experimental and engineering evaluation to determine the feasibility of purifying CO_2 derived from the flue gas generated in a tangentially fired coal combustion unit operated in the oxy-combustion mode.

Following the design and construction of a 15 bar reactor system, Air Products conducted two test campaigns using the slip stream from the tangentially fired oxy-coal combustion unit. During the first test campaign, Air Products evaluated the reactor performance based on both the liquid and gaseous reactor effluents. The data obtained from the test run has enabled Air Products to determine the reaction and mass transfer rates, as well as the effectiveness of the reactor system.

During the second test campaign, Air Products evaluated reactor performance based on effluents for different reactor pressures, as well as water recycle rates. Analysis of the reaction equations indicates that both pressure and water flow rate affect the process reaction rates, as well as the overall reactor performance.

1.0 Executive Summary

Significant U.S. coal reserves and the country's desire to decrease foreign energy dependence provide strong drivers for continued growth in coal power production. However, increasing concern for global warming from greenhouse gases, in particular CO_2 produced from fossil fuel power plants, creates a major hurdle to this growth. Carbon capture and sequestration represents one of the leading solutions to address CO_2 emissions. Oxyfuel combustion is one means of carbon capture and sequestration, in which a higher concentration of CO_2 is generated in the flue gas, enabling lower cost CO_2 capture. The main components of the flue gas will be CO_2, water vapor, O_2, N_2 and Ar. Residual components in the flue gas produced as products of combustion will consist of acid gases such as SO_3, SO_2, HCl, and NO_X. These acidic impurities will need to be removed from the CO_2 stream before it can be introduced into the pipeline to avoid corrosion and to comply with potentially stringent purity requirements for applications such as enhanced oil recovery.

Over the past several years, Air Products has been developing technology on a patented process for the compression and purification of the CO_2 stream from oxyfuel combustion of pulverized coal. The technology takes advantage of the conditions created in the CO_2 stream during compression to facilitate the reaction of SO_2 to sulfuric acid catalyzed by NO_2 generated from the excess O_2 in the stream. Once most of the SO_2 has reacted, the NO_2 will react to nitric acid in the presence of water. Under the proper conditions, all of the SO_2 and about 90% of the NO_X can be removed from the flue gas. Also, nitric acid concentrations in the process will be sufficient to remove all of the mercury from the stream.

This project consisted of the development of a comprehensive experimental and engineering evaluation to determine the feasibility of purifying CO_2 derived from an actual flue gas generated in a tangentially fired coal combustion unit operated in oxy-combustion mode. Air Products designed and constructed a 15 bar reactor system for removal of SO_X / NO_X from this CO_2-rich stream. The reactor unit was sited next to a 15 MW_{TH} tangentially fired oxy-coal combustion unit at Alstom Power Inc.

Multiple test periods were completed within two campaigns of the project. The 15 bar reactor system received a slip stream of 0.25 – 0.33 MW_{TH} equivalent flow rate from the Alstom unit for several days. This scale of operation is consistent with typical pilot-scale operations within Air Products, and thus the reactor system will be referred to as the flue gas pilot development unit (PDU). The flue gas PDU comprises three main units: scrubber/condenser, compressor, and reactor. The scrubber served to 1) operate as a high-efficiency fly ash particulate removal system, 2) provide significant removal of soluble acid gases (SO_2, SO_3 and HCl), and 3) cool the flue gas. Compression of the gas from slightly sub-atmospheric to about 15 barg occurred in a multistage adiabatic compressor unit, after which the flue gas was cooled prior to entering the reactor. In the reactor, the flue gas was contacted with water to obtain up to complete conversion of SO_2 to sulfuric acid and high conversion of the NO_X to nitric acid.

1.1 Overview

Significant U.S. coal reserves and the country's desire to decrease foreign energy dependence provide strong drivers for continued growth in coal power production. However, increasing concern for global warming from greenhouse gases, in particular CO_2 produced from fossil fuel power plants, creates a major hurdle to this growth. Carbon capture and sequestration represents one of the leading solutions to address CO_2 emissions. Oxyfuel combustion is one means of carbon capture and sequestration in which a higher concentration of CO_2 is generated in the flue gas, enabling lower cost CO_2 capture. The main components of the flue gas will be CO_2, water vapor, O_2, N_2 and Ar. Residual components in the flue gas produced as products of combustion will consist of acid gases such as SO_3, SO_2, HCl, and NO_X. These acidic impurities will need to be removed from the CO_2 stream before it can be introduced into the pipeline to avoid corrosion and to comply with potentially stringent purity requirements for applications such as enhanced oil recovery.

Over the past several years, Air Products has been developing technology on a patented process for the compression and purification of the CO_2 stream from oxyfuel combustion of pulverized coal. The technology takes advantage of the conditions created in the CO_2 stream during compression to facilitate the reaction of SO_2 to sulfuric acid catalyzed by NO_2 generated from the excess O_2 in the stream. Once most of the SO_2 has reacted, the NO_2 will react to nitric acid in the presence of water. Under the proper conditions, all of the SO_2 and about 90% of the NO_X can be removed from the flue gas. Also, nitric acid concentrations in the process will be sufficient to remove all of the mercury from the stream.

This project consisted of the design and construction of a flue gas PDU to demonstrate Air Products' patented technology for the compression and purification of a CO_2-rich stream from oxyfuel combustion. CO_2 was derived from the 15 MW_{TH} tangentially fired oxyfuel combustion unit at the host site, Alstom Power Systems Boiler Simulation Facility, in Windsor, CT. The flue gas PDU was run with an actual slip stream of 0.25 - 0.33 MW_{TH} equivalent flow rate. Tests were conducted to demonstrate Air Products' novel technology for removal of SO_X/NO_X during flue gas compression.

1.2 Background

While concentrating the CO_2 by oxyfuel combustion enables lower cost CO_2 capture [1,2,3], a different flue gas is created. The main components of the flue gas will be CO_2, water vapor, O_2, N_2, and Ar (resulting mostly from the combustion of coal, impurities in the O_2 employed, and from air leakage into the system). Acid gases, such as SO_3, SO_2, HCl, and NO_x produced as products of combustion, will also be present. To prevent corrosion and comply with probable regulations for sequestration, these acidic impurities will need to be removed from the CO_2 stream before it is introduced into the pipeline. There may also be other stringent requirements on purity, particularly for applications such as enhanced oil recovery (EOR).

In order to treat the acidic components and remove the trace inerts from the oxyfuel flue gas, Air Products is developing a novel (e.g., issued patent US7416716) specialized CO_2 compression and purification system that differentiates our technology for oxyfuel combustion from others. Air Products has recognized that during the process of compressing oxyfuel flue gas, unexpected conditions within the CO_2 stream are created that result in the complete reaction of SO_2, catalyzed by NO_2, to form sulfuric acid [4]. Once most of the SO_2 has reacted, NO_2 will then be converted to nitric acid by the addition of water, resulting in conditions in which all of the SOx and about 90% of the NOx can be removed from the flue gas. Furthermore, removal of Hg

in the process is possible. The acid gas removal is then followed by inerting to achieve CO_2 purities of about 95-98%. The gas can then be dried and compressed to 100-200 bar for transportation for sequestration or EOR. Modifications to this cycle allow purities of CO_2 greater than 99.9 mol %, with ppm levels of oxygen, a key impurity in the required purity of CO_2 for EOR.

This Air Products compression/purification technology system offers a novel way to handle the compression and purification of the CO_2-rich stream. It consists of two parts within the CO_2 compression and purification steps: 1) 1-30 bar compression with SO_x/NO_x removal, and 2) 30-110 bar compression with inert removal. This system allows for greater than 90% CO_2 capture at reduced cost.

The complete system of oxyfuel combustion for power with CO_2 capture and purification (see Figure 1) involves the following sub-systems:

- An air separation unit (ASU) for oxygen supply
- A steam boiler equipped for oxy-firing with flue gas recycle to control the burner thermal conditions
- CO_2 compression/purification
- CO_2 transport and sequestration

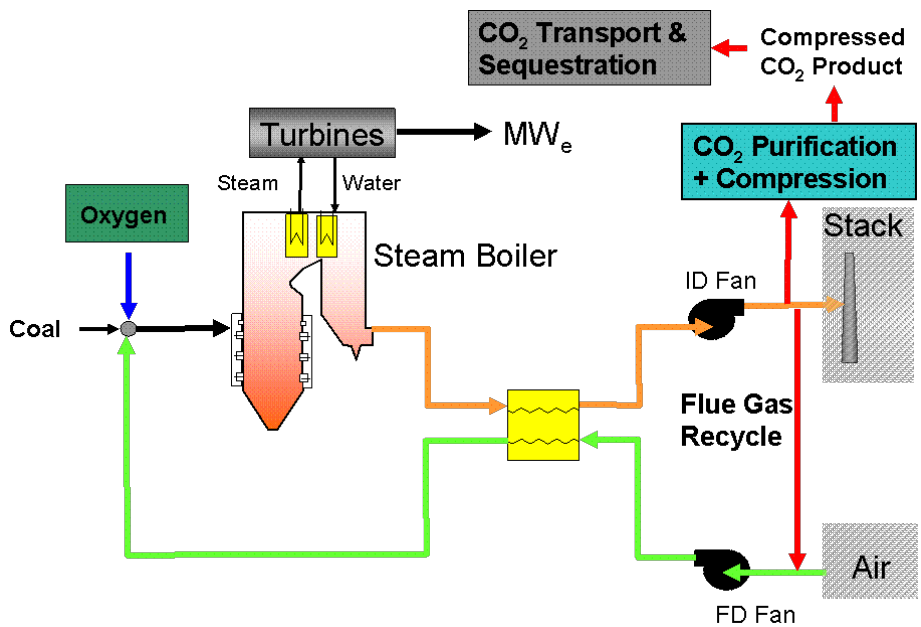

Figure 1: Generic schematic of oxyfuel combustion for power with CO_2 capture and purification

While some of the key components (i.e., the ASU, CO_2 compressors, and certain aspects of the boiler of the oxy-coal system) have been operated at scale for years, the engineering prototype of the entire system, from combustion to sequestration, needs to be demonstrated as an integrated unit. Of the four sub-systems, only the ASU is commercially available and proven. The full oxy-coal steam boiler still needs to be demonstrated at scale (most pilot units are <10 MW_e), and some of the planned boiler/burner tests with oxyfuel capture only a limited amount of CO_2. Furthermore, the system used for CO_2 capture in previous tests, such as a liquefier to produce liquid CO_2, is not representative of the system used for pipeline CO_2 in EOR, or in

sequestration. While some CO_2 transportation has occurred and a few limited tests of sequestration conducted, a demonstration at scale (>100 thousand tons per year) with oxyfuel-derived CO_2 is still needed, as is component testing of purification equipment for the CO_2 rich flue gas.

Air Products' development of its novel (e.g., issued patent US7416716), specialized CO_2 compression and purification is under way. Bench-top experiments underway confirm our simulations and initial designs. As described above, Air Products has recognized that during the process of compressing oxyfuel flue gas, unexpected conditions within the CO_2 stream are created for the complete reaction of SO_2, catalyzed by NO_2, to form sulphuric acid followed by NO_2 conversion to nitric acid. Further reactions with Hg species are expected. Thus, conditions exist to remove essentially all of the SOx and about 90% of the NOx from the flue gas.

Removing the inert gases, primarily Ar, residual O_2 and N_2, involves cooling the raw CO_2 to a temperature close to its triple point. Low-temperature inerts removal from crude CO_2 using phase separation has been described previously [1,5]. This removal leads to CO_2 purities of about 95-98%. The gas can then be dried and compressed to 100-200 bar for transportation for sequestration or EOR. The mechanism for the removal of SO_2, NOx and mercury from the raw CO_2 as it is compressed has been detailed previously [5]. A recent study of retrofitted power plants provides more detail [6]. The requirements of enhanced oil recovery affect the purification of CO_2, calling for removal of oxygen down to <100 ppmv. Modifications to this cycle allow purities of CO_2 greater than 99.9 mol %, with ppm levels of oxygen as reported [7], along with power savings. Air Products' compression/purification technology system takes advantage of these concepts to improve oxyfuel as a means for CO_2 capture, as detailed in other studies [8,9].

1.2.1 Current Technology for Oxyfuel CO_2 Purification

The process for purifying raw CO_2 from oxyfuel combustion of pulverized coal is provided in Figures 2 and 3. Figure 2 shows the raw CO_2 cooling and compression to a processing pressure of about 30 bar, and Figure 3 shows the low-temperature purification process. The impure CO_2 from the power boiler is cooled by direct contact water scrubbing in a packed tower, C101, to condense water vapor, remove traces of ash and dissolve soluble gases such as SO_2, SO_3 and HCl. The circulating water system used for scrubbing is cooled by indirect heat transfer with a cooling water stream in E101, and a filtration system removes any ash present. The net condensed water, together with the soluble impurities, is sent to a water treatment system for further purification.

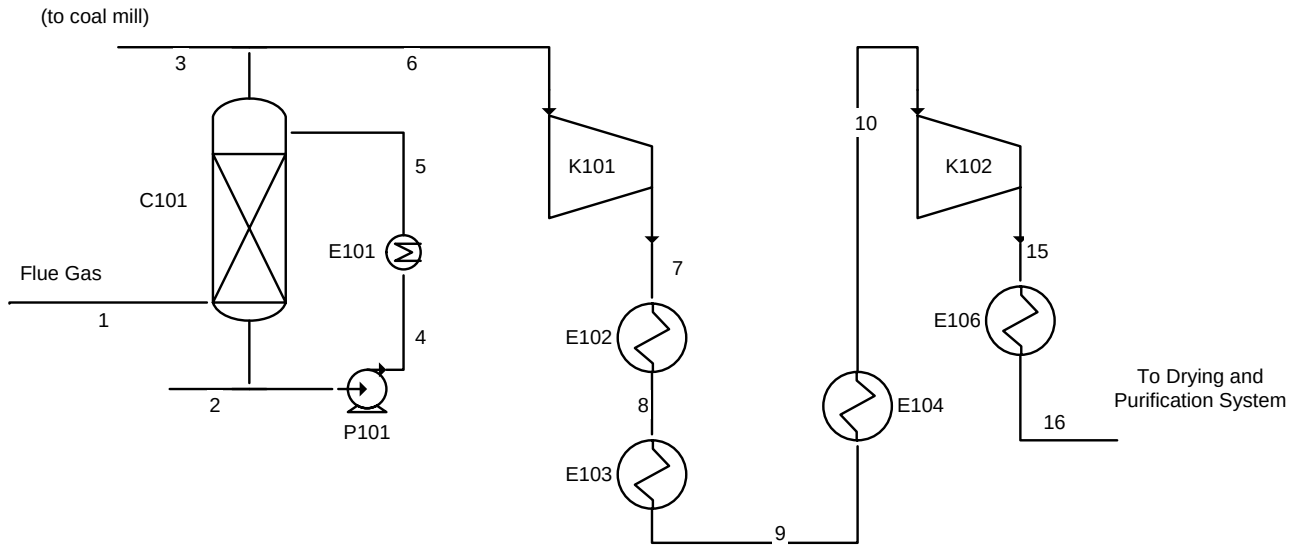

Figure 2: Raw CO_2 cooling and compression to 30 bar

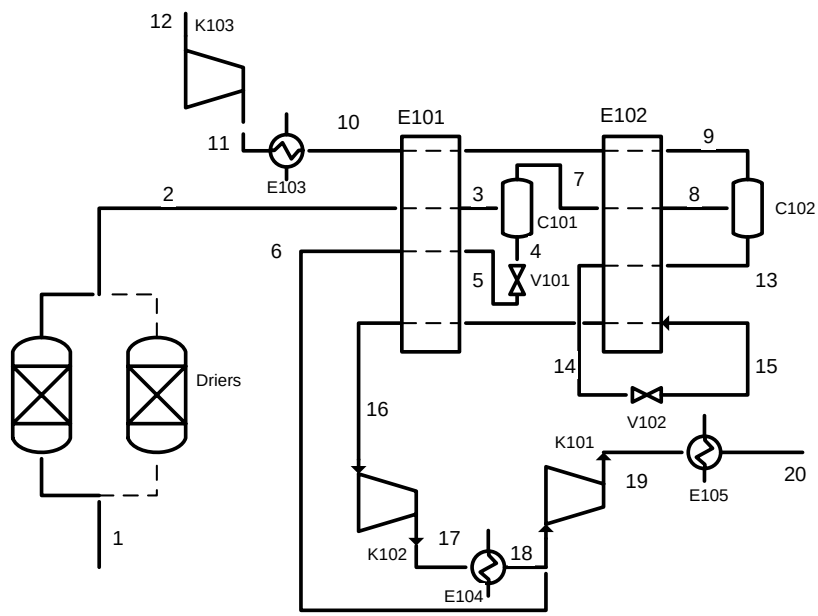

Figure 3: CO_2 inerts removal and compression

Limited SO_2 or NOx is removed in this water scrubbing process. The ambient temperature CO_2 at atmospheric pressure is compressed to an intermediate pressure of about 30 bar in axial/centrifugal flow adiabatic compressors K101 and K102. The heat of compression is recovered for boiler feed water heating, in E102, and condensate preheating, in E103, in the boiler steam system, reducing the requirement for steam preheating. E104 and E106 are final coolers using cooling water. The impure 30 bar CO_2 is then dried in a dual-bed, thermally regenerated desiccant drier. O_2, N_2 and Ar are removed from the CO_2 by low-temperature processing, shown in Figure 3. The impure CO_2 is cooled in E101 and E102 against evaporating lower pressure liquid CO_2 streams to -55°C, a temperature close to its triple point, which reduces the partial pressure of CO_2 in the uncondensed gas stream to about 5 bar,

corresponding to a typical concentration of approximately 20-25 mol % CO_2. The inerts stream leaving the cold equipment at about 30 bar is further heated, and power is recovered from the stream using a power turbine. The purified CO_2 streams leaving the cold equipment are compressed in a second stage of CO_2 compression, which could include heat recovery to the boiler steam system, particularly if K101 was adiabatic.

Once the net flue gas is cooled by direct contact with water, as in Figure 2, the raw CO_2 composition entering the CO_2 compressor is then typically as shown in column 1 of Table 1 [2]. After CO_2 purification as described above, the CO_2 product will have the composition shown in column 2 and the vent shown in column 3. Although some of the NOx, N_2, O_2 and Ar are removed, all of the SO_2 was previously believed to leave with the CO_2. Air Products will now discuss why that is *not* the case, and that the correct compositions in Table 1 columns 4 and 5 are more typical of the CO_2 purities one can expect from the process in Figures 2 and 3.

Table 1: Raw and product CO_2 compositions from basic oxyfuel process

	Raw Flue Gas **@ 35°C, 1.02 bara mol%**	**CO_2 Product** **@ 35°C, 110 bar mol%** **Prior Art**	**Vent** **@ 11°C, 1.1 bar mol%** **Prior Art**	**CO_2 Product** **@ 35°C, 110 bar mol%** **Corrected**	**Vent** **@ 11°C, 1.1 bar mol%** **Corrected**
CO_2	71.5	95.8	24.6	96.3	24.6
N_2	14.3	2.0	48.7	2.0	48.7
O_2	5.9	1.1	19.4	1.1	19.4
Ar	2.3	0.6	7.1	0.6	7.1
SO_2	0.4	0.5	0	0	0
NO	400 ppm	13 ppm	1180 ppm	< 10 ppm	< 100 ppm
NO_2	10 ppm	0	0	< 10 ppm	0
H_2O	5.6	0	0	0	0

1.2.2 NOx, SOx and Hg *Removal* in Oxyfuel Combustion

To improve the purity of the CO_2, one could remove the NO_2 and SO_2 together in a distillation step, integrated into the inerts removal process. This solution is discussed in prior publications [2,3]. NOx from the boiler is mostly produced as NO. To remove NO from the CO_2, NO would have to convert to NO_2 and be distilled from the system. Conversion of NO to NO_2:

$$NO + \tfrac{1}{2} O_2 = NO_2 \qquad (1)$$

has been studied by many authors in the 20th century, and their results are reviewed in reference [4]. At the high temperatures at which NOx is formed, the equilibrium dictates that mostly NO will be formed. At low temperature, the equilibrium of Equation 1 is strongly in favor of NO_2 production rather than NO; however, at low pressure the rate of Equation 1 is low and

so, in an air-fired boiler without CO_2 capture or NOx removal, the main emission would be NO. Therefore, a method of increasing the conversion of NO to NO_2 was required.

The rate of Equation 1 is slow, but speeds up with *decreasing* temperature and increasing pressure, and the reaction is a third-order reaction:

$$d[NO_2]/dt = 2k\ [NO]^2.[O_2] \qquad (2)$$

where k, in $l^2\ mol^{-2}\ s^{-1}$, is $1200 \times 10^{230/T}$ [3], and where T is in Kelvin. Since the rate is therefore proportional to pressure to the 3rd power, this reaction rate is likely to become significant at higher pressures and low temperatures. The first such place in the oxyfuel purification process is after compression to the 15 bar point in the compression train. Therefore, at the 15 bar point in the CO_2 compression system, the rate of Equation 1 will have increased sufficiently for it to require only a few seconds to reach equilibrium and convert most of the NO to NO_2, especially since there is plenty of oxygen in the raw CO_2 stream, due to the excess oxygen required for combustion.

The second reaction of significance at this point is the reaction of NO_2 with SO_2 to form sulfuric acid, commonly referred to as the lead chamber process for the manufacture of sulfuric acid:

$$NO_2 + SO_2 + H_2O \quad = \quad NO + H_2SO_4 \qquad (3)$$

This reaction has been shown to be kinetically limited, but rapid enough at elevated pressure to be significant over the time scales relevant to this work.

Once most of the SO_2 has been removed by Equations 1 and 3, NO_2 will be converted to nitric acid by the well understood nitric acid process:

$$2\ NO_2 + H_2O \quad = \quad HNO_2 + HNO_3 \qquad (4)$$
$$3\ HNO_2 \quad = \quad HNO_3 + 2\ NO + H_2O \qquad (5)$$

with the NO formed in Equations 3 and 5 being reconverted to NO_2 by Equation 1.

These reactions provide a pathway for removal of SO_2 as H_2SO_4 and for removal of NO and NO_2 as HNO_3. Any elemental mercury or mercury compounds present in the gaseous CO_2 will also be removed, since mercury will be converted to mercuric nitrate because mercury compounds react readily with nitric acid. Typical nitric acid concentrations in the process will be sufficient to remove all mercury from the CO_2 stream, either by reaction or dissolution.

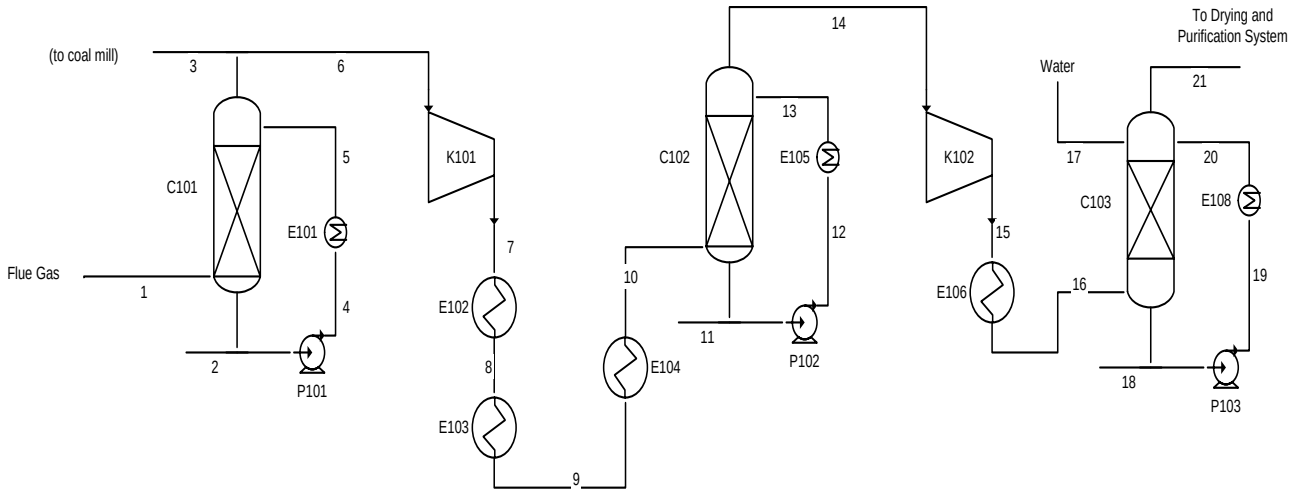

Figure 4: Raw Oxyfuel CO_2 compression with integrated SOx and NOx removal

To allow the reactions so far presented to proceed in order to remove SO_2, NO and NO_2 from the process, residence time and contact with water must be introduced after compression of the raw CO_2, as shown in Figure 4 and detailed previously [5]. It is mentioned above that, after adiabatic compression to 15 bar, the CO_2 is cooled by preheating Boiler Feed Water (BFW) and condensate. Final cooling is accomplished with cooling water. At this point hold-up is added to the process, by, for instance, the use of a contacting column with pumped-around liquid condensate. In this example, the SO_2-free CO_2 is then compressed to 30 bar before being dried and the inerts removed. This 30 bar point is considered the ideal location to remove the NO and NO_2 from the process. A similar process as that of the 30 bar reactor can be operated at 15 bar, which adds another few seconds of hold-up to the process.

The contactors allow intimate mixing of water with SO_3 and then with NO_2 to remove these components from the gas continuously, thus allowing reactions to proceed until all SO_2 and the bulk of the NO is removed. Little HNO_2 or HNO_3 will be formed until most of the SO_2 has been consumed. Some NO_2 formed by Equation 1 will be consumed by the reaction in Equation 3, but the latter reaction produces NO, thus resulting in zero net NOx removal. Therefore, the reaction in Equation 4 is the dominant route for NOx removal, producing HNO_2 or HNO_3. About 90% of the NOx and all of the SO_2 can be removed in this way from the CO_2 before inerts removal. For these reactions, initial bench-top experiments have been completed at Imperial College as part of a United Kingdom-funded program DTI 404. The small-scale tests with simulated flue gas via cylinders show the presence of H_2SO_4 and HNO_3 in the reactor condensate. Those tests were followed by a bench-top unit on a slip stream from a small-scale oxy-coal burner.

1.2.3 Oxygen Removal from CO_2 and Other Process Improvements

The purity of CO_2 required for enhanced oil recovery is greater than that required for other geological storage sinks due to the necessity to minimize oxygen content, since the oxygen would react with the hydrocarbons within the oil field. This factor adds another requirement to the purification of CO_2 from oxyfuel applications, as there may be about 1 mol % oxygen in the captured CO_2 due to the excess oxygen from combustion. This oxygen could be removed by using a fuel-rich combustor, or by using a catalytic combustor, to consume the oxygen present

in the CO_2 before inerts removal. However, the route Air Products has chosen is to modify the flow sheet in
Figure 3 to incorporate distillation of the liquid CO_2 to remove oxygen. This step allows us to reach purities of 100 ppm or less O_2 in the CO_2 without adding other impurities that might be created by fuel-rich combustion. The choice of the placement and operating conditions of the distillation column(s) can also facilitate the production of liquid CO_2 if desired (see Table 2), with little power penalty.

A key means to improve the overall CO_2 recovery is the addition of a membrane on the vent stream from the inerts removal system (streams 10 or 11 or 12 in Figure 3). The membrane will recover appreciable amounts of both CO_2 and O_2 and still reject sufficient inerts to purge the system. Through prudent recycle of the membrane permeate (O_2/CO_2) back to the boiler island, the overall CO_2 recovery can be increased from ~90% to nearly 98%, and the O_2 required from the ASU can be reduced by ~5%.

1.2.4 The Power, Recovery and Purity Trade-off in CO_2 Purification

Table 2 shows several different options for CO_2 purification from an oxyfuel-fired coal combustion system with a relative specific power (i.e., the ASU and CO_2 purification / compression power per ton of CO_2 captured, normalized). Actual powers will depend upon the type of coal burned and the amount of air in leakage (ambient air leaking into the boiler due to sub-atmospheric boiler operation) into the boiler, since this will dictate the level of inerts that must be removed from the raw CO_2, together with issues such as cooling water temperature. However, the numbers within Table 2 are consistent. While the standard cycle produces low-purity CO_2 with reasonable power and CO_2 recovery levels, as shown by the flow sheet in Figure 3, other advanced options offer additional benefits. Increasing the purity of the CO_2 using an alteration to Figure 3 described in [2] decreases recovery by 2%, with a 1% reduction in power, and thus overall a reduction in capture efficiency. However, other means can be employed to achieve both high CO_2 recovery and lower specific power. Normally reaching the higher purities required by EOR leads to about a 3% increase in power (standard cycle vs. high-purity option 1), but proper use of other unit operations (e.g., distillation, membrane) can eliminate this increase (high-purity option 2 and high-purity option 1 with membrane). Thus the results detailed in Table 2 show the potential of Air Products' technology to deliver over 90% CO_2 capture.

Table 2: Power, recovery and purity in oxyfuel CO_2 purification

Description	CO_2 Purity		Oxygen Content		CO_2 Pressure	CO_2 Recovery	Relative Specific Power
Standard Cycle	95.90	mol%	0.91	mol%	110 bar	89.0%	1.00
High Purity Option 1	99.89	mol%	100.00	ppm	110 bar	87.4%	1.03
High Purity Option 2	99.98	mol%	100.00	ppm	110 bar	87.7%	0.99
30 bar liquid CO_2	99.98	mol%	100.00	ppm	30 bar	87.7%	0.98
7 bar liquid CO_2	100.00	mol%	5.01	ppm	7 bar	87.7%	1.02
Standard with membrane	96.30	mol%	0.73	mol%	110 bar	97.7%	0.91
High purity Option 1 with membrane	99.86	mol%	100.00	ppm	110 bar	97.9%	0.97

1.2.5 Improvement over Competing and Emerging Technologies

Several recent studies have highlighted means to improve oxyfuel coal power plants [1,2,6]. For the retrofit/rebuild case, the existing plant could be modified to operate at advanced supercritical (ASC) steam conditions with an integrated oxyfuel CO_2 capture plant. For new builds, the ASC base plant would be designed with an integrated oxyfuel CO_2 capture plant. The basic concept of the overall system is to replace air with near-pure oxygen for combustion of coal. A stream of recirculated flue gas to the boiler is required to (i) provide transport medium for pulverized fuel and (ii) maintain conventional combustion equipment design and retrofit furnace/boiler design. After leaving the boiler system, the product high-CO_2 content flue gas is further processed to provide high-pressure CO_2.

The proposed Oxyfuel CO_2 Capture Plant concept is aimed at targeting near-term opportunity and is based on conventional well proven / proven technology, where possible, to minimize risk. Plant performance is optimized through process integration of the air separation process, the boiler island (including achievable minimum air infiltration), the turbine island, the balance of plant and CO_2 compression plant to a level compatible with high reliability and availability [6]. While not necessary for normal operation, the Selective Catalytic Reduction (SCR) system for NOx mitigation can be retained to meet emission limits during air-firing. It is important to note that low NOx burners are not required for oxyfuel combustion if the CO_2 purification system can handle the NOx levels as described within this proposal and previously [5].

An imperative of the conceptual design is the need for the oxyfuel boiler plant to cover the same range of fuels as is covered by the existing conventional air-fired plants, particularly with respect to sulfur content and chlorine content of the coal. In order to ensure that the oxyfuel plant is no more susceptible to high-temperature corrosion due to increased concentrations of SO_2 (and SO_3) and HCl, the oxyfuel flue gas needs to be cleaned before being recycled to the mills and the boiler. One option is to utilize a conventional Wet Limestone Gypsum Flue Gas Desulfurization (FGD) plant to provide clean Oxyfuel Flue Gas Recycle (FGR), which ensures

the corrosive gaseous components in the Oxyfuel FGR result in concentrations in the furnace no worse than that of other plants' experience with air-firing. The FGR recycle stream is split into primary and secondary streams. The primary stream quantity is set according to the requirements of the milling plant. The secondary stream quantity is set to give the optimum balance between the combustion equipment and furnace requirements. A recent study of retrofitted power plants provides more detail [6]. The level of flue gas cleaning for boiler plants will vary with different fuel properties, from having no requirement for FGD with very low-sulfur fuels to full FGD with higher sulfur fuels.

As above, the process for purifying raw CO_2 from oxyfuel combustion of pulverized coal includes cooling the impure CO_2 by direct contact water scrubbing in a packed tower to condense water vapor, remove traces of ash and dissolve soluble gases such as SO_2, SO_3 and HCl. The ambient-temperature CO_2 at atmospheric pressure is compressed to an intermediate pressure of about 30 bar in an axial/centrifugal flow adiabatic compressor. The impure 30 bar CO_2 is then dried in a dual-bed, thermally regenerated desiccant drier. Oxygen, nitrogen and argon are removed from the CO_2 by low-temperature processing. The impure CO_2 is cooled to a temperature close to its triple point, which reduces the partial pressure of CO_2 in the gas stream to about 5 bar, corresponding to a typical concentration of approximately 20-25%. Refrigeration for this process is provided by evaporating liquid CO_2 at pressures below the 30 bar feed gas pressure. The purified CO_2 streams leaving the cold equipment are further compressed or pumped to the delivery pressure. Although some of the NOx, N_2, O_2 and Ar are removed, all of the SO_2 was previously believed to leave with the CO_2. However, any expectation that those impurities would exit in the CO_2 products is erroneous, and thus the approach proposed by Air Products offers a solution.

Another conventional option is to use a CO_2 liquefier with an NH_3 refrigeration loop. Unfortunately, those systems for liquid CO_2 by-product production have two significant drawbacks: 1) the specific power for CO_2 purification and compression is significantly higher than the values cited here, and 2) the CO_2 recovery rates are significantly lower and will not meet a 90% CO_2 capture target. Hence, Air Products has created a development pathway for the proposed CO_2 purification / compression system that will avoid the drawbacks of the conventional systems.

As for non-oxyfuel systems, Air Products has participated in studies where both oxy-combustion and flue gas scrubbing (via amines) have been directly compared as CO_2 capture technologies. Even though the choice of CO_2 capture technology is influenced by boiler characteristics, coal type, and other factors, oxy-coal with the Air Products CO_2 purification / compression system can clearly achieve over 90% CO_2 capture and improve cost savings over amine scrubbing when the SCR and FGD are removed [9].

The potential market segment within the electric power sector is coal-fired utilities and industrial boilers, which represent a majority of the U.S. generation fleet. Oxy-combustion is amenable to the entire coal-fired fleet. Obviously, application of the technology will occur on a case-by-case basis after review of the particulars of the generation site. It is important to note that oxy-coal combustion can be utilized for *both* retrofit and new build units [8,9]. There is no limit of the technology for any type of coal combustion system (wall, tangentially, arch, or cyclone firing). Thus, there are many gigawatts of electric power amenable to the oxy-combustion systems for CO_2 capture. Air Products' CO_2 purification / compression system is particularly well suited for all of the oxy-coal combustion applications, as it can handle various impurities in the CO_2-rich flue gas.

1.2.6 Integrated Technology/Power Plant Design Considerations

Air Products has participated in several studies to both understand the potential of this new technology and to identify how the design would be integrated into a pulverized coal-fired power plant in oxyfuel combustion operation. These studies involved multiple partners, including boiler and turbine suppliers. Briefly, the results include adjustments to Air Products' CO_2 purification / compression system in consideration of either the new build power plant design or the planned retrofit of an existing power plant. The United Kingdom's Department of Trade and Industries (DTI), along with several power companies, sponsored a study entitled "DTI 407: Coal-Fired Advanced Supercritical Boiler / Turbine Retrofit with CO_2 Capture" [6,8]. The work undertaken under DTI Project 407 demonstrated that it is technically feasible to retrofit an existing coal-fired power plant with oxyfuel combustion as a carbon capture technology. Another study, entitled "DTI 366: Future CO_2 Capture Technology Options for the Canadian Market" [9], was sponsored by the Canadian Clean Power Coalition and DTI. This project, DTI-366, has established a case for advanced supercritical power plant steam conditions and net plant output suitable for CO_2 Capture Power Plant application in Canada. It is important to note that this study established overall CO_2 Capture Power Plant designs and process integration built on knowledge and experience of proven conventional air-firing power plants. In addition, conceptual designs and layout for new-build CO_2 Capture and CO_2 Capture-retrofit pulverized coal-fired advanced supercritical power plants with oxyfuel CO_2 Capture technology achieved a CO_2 emissions capture level up to 90%.

From a high level, the placement of the CO_2 purification / compression system is shown in Figure 1. Actual details on the overall CO_2 purification / compression process flow diagrams have been shown in Figures 3 and 4. Further integrations within an overall power plant site have been cited above [6, 8-9].

2.0 Overall Project Plan

2.1 Technical Approach and Understanding

Little attention has been given to the removal of NOx and mercury compounds in oxyfuel combustion systems. In the low-temperature inerts removal system, no detailed analysis has yet been presented on the behavior of NO and NO_2 in the separation train. Indeed, in previously published work, the assumption has been that most of the NO present in the CO_2 feed would leave with the inert gas, while NO_2 would leave with the liquid CO_2. Mercury could be distributed between the condensed water produced in the compression process and the CO_2 product, although one would assume that the desiccant drier would also catch some of this mercury. Finally, it has generally been accepted that the SO_2 present in the raw CO_2 stream will leave with the CO_2. However, any expectation that those impurities would exit in the CO_2 products is erroneous; thus the approach proposed by Air Products offers a solution.

In order to treat the acidic components and remove the trace inerts from the oxyfuel flue gas, Air Products is developing novel (issued patent US7416716) specialized CO_2 compression and purification that differentiates our technology for oxyfuel combustion from others. Bench-top experiments underway confirm our simulations and initial designs. Air Products has recognized that during the process of compressing oxyfuel flue gas, unexpected conditions within the CO_2 stream are created for the complete reaction of SO_2, catalyzed by NO_2, to form sulphuric acid. Once most of the SO_2 has reacted, NO_2 will then be converted to nitric acid by the addition of water, resulting in conditions in which all of the SOx and about 90% of the NOx can be removed from the flue gas. This Air Products compression/purification technology system offers a novel

way to handle the compression and purification of the CO_2-rich stream. It consists of two parts within the CO_2 compression and purification steps: 1) 1-30 bar compression with SOx/NOx removal, and 2) 30-110 bar compression with inert removal. This system allows for greater than 90% CO_2 capture at reduced cost.

As described previously, initial bench-top experiments have been completed, and a small-scale test of the bench-top unit on a slip stream from an oxy-coal burner has been conducted as well. The next logical step is a larger scale test at the expected operational pressure and temperature using a slip stream from an oxy-coal combustion system that provides realistic conditions. In particular, data is required from such a unit in order to eventually scale up and commercialize the process. However, rather than demonstrating the entire system, it is important to first test the key reactor component (the 15 bar column / reactor) in order to obtain engineering design data and develop models to estimate performance. This step would then enable proper design of the downstream unit operations (e.g., 30 bar reactor, inert removal system).

To that end as part of this project, Air Products designed, built, and commissioned a 15 bar reactor system for purification of CO_2 from oxy-coal combustion. The system was designed to cool an oxy-coal combustion flue gas slip stream (~0.35 MWth flow rate equivalent), and compress from 1 bar to 15 bar and react within a 15 bar column the SOx/NOx present in the CO_2-rich flue gas. The process flow diagram for the pilot unit is shown in Figure 5. The unit had a flue gas condenser / dust removal unit (C301). After cooling, the flue gas was compressed with an adiabatic compressor (K101) to 15 bar and cooled via a heat exchanger (E102). The high-pressure stream was fed to the reactor (C102) with reaction temperature managed by an external heat exchanger (E105). The reaction overhead was returned to the oxy-coal combustion unit for proper treatment. Air Products performed a shake-down test of the reactor system and shipped the unit to Alstom Power in Windsor, CT.

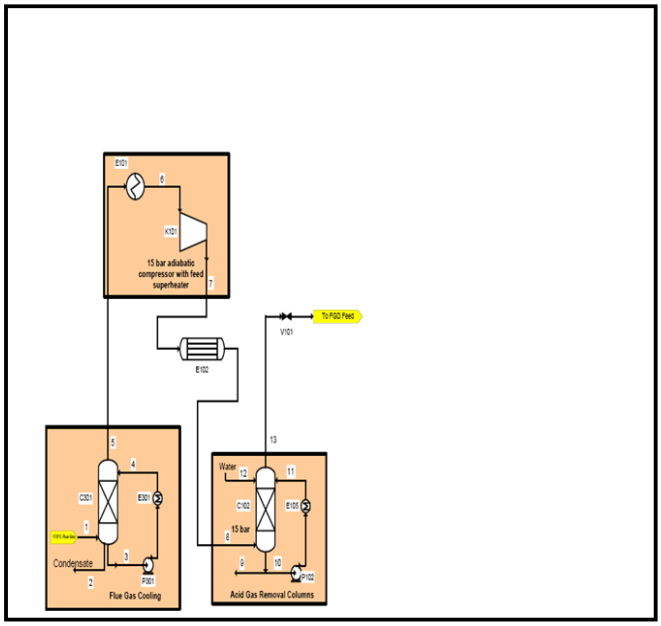

Figure 5. Process flow diagram of 15 bar reactor system.

As described in section 1.2.2, the conversion of NOx and SOx species within the CO_2-rich flue gas can occur via several reactions. The main reactions which take place between SO_2, SO_3,

H_2O, NO, and NO_2 when impure CO_2 (containing these compounds) is maintained at an elevated pressure (i.e., higher than atmospheric pressure) are:

$$NO + \tfrac{1}{2} O_2 = NO_2 \quad (1)$$

$$d[NO_2]/dt = 2k\,[NO]^2.[O_2] \quad (2)$$

$$NO_2 + SO_2 + H_2O = NO + H_2SO_4 \quad (3)$$

$$2\,NO_2 + H_2O = HNO_2 + HNO_3 \quad (4)$$

$$3\,HNO_2 = HNO_3 + 2\,NO + H_2O \quad (5)$$

$$2\,NO_2 = N_2O_4 \quad (6)$$

Further, Reaction 3 can be re-written as two reactions:

$$NO_2 + SO_2 = NO + SO_3 \quad (3A)$$

$$SO_3 + H_2O = H_2SO_4 \quad (3B)$$

These reactions can be described as follows:

- Reaction (1) is gas phase, kinetically controlled;
- Reaction (3A) is gas phase, kinetically controlled; and
- Reaction (3B) is dissolution in the water phase, which can be designed in a contactor to be a fast process.
- Reaction (4) is liquid phase, kinetically controlled;
- Reaction (5) is liquid phase, equilibrium controlled with fast kinetics; and
- Reaction (6) is gas phase, equilibrium controlled with fast kinetics.

Reactions (1), (3A) and (4) have reaction rates that limit the conversion process, whereas Reactions (3B), (5) and (6) are considered to be fast enough not to limit the process. Air Products has found that the rate of Reaction (1) does not become useful until the pressure has increased to at least about 3 bar and is most effective from about 10 bar to about 50 bar, for example, in a CO_2 compression train where the gas has been cooled in the compressor intercooler or after cooler. The precise temperature to which the gas is cooled determines the amount of water vapor present in the resultant CO_2 gas, and hence the amount of water vapor that condenses in the acid scrub tower. The excess acid is removed at a concentration determined by the operating temperature, the pressure and the levels of H_2O and SO_2 present in the crude CO_2 stream.

Reactions (1) and (3A) together are the lead-acid chamber process for the manufacture of sulfuric acid, catalyzed by NO_2. . Reactions (1, 4, 5 & 6) are part of the nitric acid process and so are well known. Overall, the contact time within the reactor determines the degree of conversion of SO_2 to H_2SO_4 and NOx to HNO_3. A total contact time of no more than 60 seconds is usually sufficient for maximum conversion of SO_2/NOx. Counter-current gas/liquid contact devices such as columns or scrub towers allow intimate mixing of water with SO_3 and then with NO_2 to remove continuously these components from the gas. In this way, reactions can proceed until at least substantially all SO_2 is removed, together with the bulk of the NOx. Such devices can provide the required contact time for the conversion(s).

Table 3. Proxy flue gas composition from oxy-coal combustion slip stream

CO_2	mol%	57.9
H_2O	mol%	27.4
Ar	mol%	2.3
O_2	mol%	3.8
N_2	mol%	8.1
SO_2	ppm v	2600
SO_3	ppm v	TBD
HCl	ppm v	TBD
HF	ppm v	TBD
NO	ppm v	1000
NO_2	ppm v	TBD
Hg species	ppm v	TBD

2.2 Work Scope

Thus an actual test of the 15 bar system was needed, as well as an analysis of the actual compositions and all the constituents within the oxy-coal-derived flue gas. Air Products evaluated the reactor unit using oxy-coal-derived flue gas generated on-site by Alstom Power. Alstom Power provided the oxy-coal combustion flue gas utilized in the proposed project as part of another DOE proposal. Air Products conducted a multi-day run using an actual coal-derived flue gas. Air Products evaluated the performance of the reactor based on the reactor effluents. Air Products characterized the reactor effluents (both liquid and gaseous) using standard analytical techniques to assess any change in reactor performance. For the 15 bar column / reactor, this desired data is invaluable in determining reaction rates and mass transfer rates. The composition of *both* the exiting gas and liquids helped determine the effectiveness of the reactor system. In addition, the data further quantified the reactions that take place and provide an understanding of the fate of impurities, particularly mercury.

Next, Air Products evaluated the robustness of reactor performance using oxy-coal-derived flue gas generated on-site by Alstom Power. Air Products conducted more multi-day runs using an actual coal-derived flue gas. Air Products evaluated the performance of the reactor based on the reactor effluents for different reactor pressures, as well as water recycle rates. As can be deduced from the reaction equations, pressure and water flow rates may have an important effect on the reaction rates and the overall reactor performance. Air Products characterized the reactor effluents (both liquid and gaseous) using standard analytical techniques to assess any change in reactor performance.

Both pressure and temperature are important reactor parameters. Air Products has found that the reactions are most effective at pressures from 10 to 30 bar. Thus, an initial column pressure of 15 bar was utilized based on previous results. However, reactor pressure was adjusted to optimize reactor performance. The temperature at which the gaseous carbon dioxide is maintained at said elevated pressure(s) to convert SO_2 to sulfuric acid and/or NOx to nitric acid is usually no more than about 80°C, and preferably the reactor temperature was maintained near ambient conditions (~30°C).

A further advantage of the system is that, as nitric acid is produced, any elemental mercury or mercury compounds present in the gaseous carbon dioxide will be converted to mercuric nitrate,

and other mercury compounds will react readily with nitric acid. Typical nitric acid concentrations in the process will be sufficient to remove all mercury from the carbon dioxide stream, either by reaction or dissolution. The analyses of the reactor effluents were conducted, but difficulties in detecting mercury either in the gas phase or the liquid phase occurred.

Based on the data obtained from the 15 bar reactor system experiments, and using established engineering fundamentals, Air Products developed an engineering model to describe the 15 bar purification reactor performance. Air Products then performed a sensitivity analysis using said model to elucidate those parameters most critical to performance.

The project was completed in a 24-month project consisting of two sequential phases of work, including laboratory performance evaluation, pilot-scale testing of coal-derived gas and process engineering and evaluation. The Statement of Program Objectives, provided below in section 2.3, presents a scope of work, specific tasks, rationale for executing these objectives and a 24-month project timeline. The two sequential phases were separated by a critical go/no-go decision point. In Phase I, the objective was to design, build, and commission a 15 bar reactor system and perform an experimental evaluation of the SOx / NOx reaction process for purification of CO_2 from oxy-coal combustion. After passing the go / no go decision point, the Phase 2 objectives included further evaluations of the reaction process under conditions closely approximating those of the intended application, including higher pollutant removal. Air Products developed an engineering model to describe the 15 bar purification process and to elucidate critical process parameters.

2.3 Statement of Program Objectives (SOPO)

Phase 1 (Tasks 1 - 3)

Task 1.0 Project Management, Planning and Reporting
Air Products will revise and maintain the Project Management Plan (the “Plan”) and manage and report on activities in accordance with the Plan throughout the Project. Air Products will attend meetings and prepare technical and financial status and management reports as set forth in the DOE Cooperative Agreement. A final technical report describing the work that Air Products performed will be prepared at the end of the Project.

Task 2.0. Design and Construction of Reactor System for Purification of CO_2 from Oxy-Coal Combustion. Air Products will design, build, and commission a 15 bar reactor system. The system will be designed to cool an oxy-coal combustion flue gas slip stream(~0.35 MWth flow rate equivalent), compress from 1 bar to 15 bar and react within a 15 bar column the SOx/NOx present in the CO_2 rich flue gas. Air Products will perform a shake-down test of the reactor system and ship the unit to Alstom Power in Windsor, CT.

Task 3.0. Evaluate Reactor Performance for Purification CO_2 from Oxy-Coal Combustion. Air Products will evaluate the reactor unit using oxy-coal derived flue gas generated on-site by Alstom Power. Alstom Power will provide the oxy-coal combustion flue gas utilized in this Project. Air Products will conduct at least one multi-day run using an actual coal-derived flue gas. Air Products will evaluate the performance of the reactor based on the reactor effluents. Air Products will characterize the reactor effluents (both liquid and gaseous) using standard analytical techniques to assess any change in reactor performance.

Phase 2 (Tasks 4, 5)

Task 4.0. Evaluate Robustness of Reactor Performance for Purification CO_2 from Oxy-Coal Combustion. Air Products will evaluate the reactor unit using oxycoal derived flue gas generated on-site by Alstom. Alstom will provide the oxycoal combustion flue gas utilized in this Project. Air Products will conduct at least two multi-day runs using an actual coal-derived flue gas. Air Products will evaluate the performance of the reactor based on the reactor effluents for different reactor pressures as well as water recycle rates. Air Products will characterize the reactor effluents (both liquid and gaseous) using standard analytical techniques to assess any change in reactor performance.

Task 5.0. Model the Reactor Performance. Based on the experimental data obtained in Tasks 3 & 4, Air Products will develop an engineering model to describe the 15 bar purification reactor performance. Air Products will perform a sensitivity analysis using said model to elucidate those parameters most critical to performance.

3.0 Results and Discussion

3.1 Phase 1 Task 1: Project Management, Planning and Reporting

Air Products maintained the Project Management Plan and managed and reported on activities in accordance with the Plan throughout the Project. Air Products attended meetings and prepared technical and financial status and management reports as set forth in the DOE Cooperative Agreement. This final technical report describing the work that Air Products performed has been prepared at the end of the Project. In addition, the results from the program were presented at NETL Department of Energy/National Energy Technology Laboratory (DOE/NETL) 2010 CO_2 Capture Technology R&D Meeting, 13-17 September 2010 and at the Annual DOE/NETL CO_2 Capture Technology for Existing Plants R&D on March 25, 2009.

3.2 Phase 1 Task 2: Design and Construction of Reactor System for Purification of CO_2 from Oxy-Coal Combustion

The Phase 1 objectives for Task 2 included the design, construction, and commissioning of a 15 bar reactor system for removal of SOx /NOx from actual oxy-coal derived, CO_2-rich flue gas. The system was designed to cool an oxy-coal combustion flue gas slip stream(~0.35 MWth flow rate equivalent), compress from 1 bar to 15 bar and react within a 15 bar column the SOx/NOx present in the CO_2 rich flue gas.

The 15 bar reactor system received a slip stream of 0.25 – 0.33 MW_{TH} equivalent flow rate from the Alstom unit for several days. This scale of operation is consistent with typical pilot-scale operations within Air Products, and thus the reactor system will be referred to as the flue gas pilot development unit (PDU). The flue gas PDU comprises three main units: scrubber/condenser (C301), compressor (K101), and reactor (C102), as shown in Figure 5. Fine particulate ash in the flue gas, as well as acid mist, is removed prior to compression to avoid damage to the compressor. The scrubber 1) operated as a high-efficiency particulate removal system, 2) provided significant removal of soluble acid gases (SO_2, SO_3 and HCl), and 3) cooled the flue gas. Compression of the gas from slightly sub-atmospheric to about 15 barg occurred in the multistage adiabatic compressor unit, after which the flue gas was cooled prior to entering the reactor. In the reactor, the flue gas was contacted with water to obtain up to complete conversion of SO_2 to sulfuric acid and high conversion of the NO_x to nitric acid. A

main focus of the test campaign was to elucidate the effects of reactor conditions (e.g., pressure, residence time, water recirculation) on reactor performance.

The project team evaluated outside contractors for both the construction of the entire flue gas PDU, as well as assembly of the sub systems. After initial inquiries regarding costs and timing, the project team concluded that to meet the budget and timing constraints, the sub systems should be assembled at Air Products' Trexlertown, PA campus. Air Products has broad experience in the construction and operation of pilot-scale plants, and this project was deemed to be well within the company's capabilities. Two resources with over 30 years of experience were obtained from the Scale-up and Pilot Plants group within the Process and Separations Center to construct the PDU. These individuals utilized resources from the Instrumentation and Engineering Technology group to supplement their areas of expertise, in particular electrical and instrumentation.

Flue Gas Scrubber (C301):
Scrubber specifications were sent to four vendors for initial quotes. The scale of the pilot unit scrubber was below the standard offerings of two of the vendors, and they had no interest in bidding on the unit. The two remaining vendors submitted similar quotes for a scrubber system consisting of two stages 1) a high-energy venturi followed by 2) a counter-current packed tower. The first stage would operate as a high-efficiency particulate removal system, and the second stage would enable further removal of the soluble acid gases (SO_3 and HCl) and cooling of the flue gas. The detriments of this proposal were a packed tower once-through water rate of 1.5 gpm, a high-pressure drop of 60" water column, and a system height of 15 feet. Because of the high ash loading and acid content of this water stream, the water will be collected for disposal. At 1.5 gpm, almost 11,000 gallons of water would be collected over a 5-day campaign. Therefore, the scrubber design needed to minimize water usage while still achieving the reduction in particle loading and soluble acid gases. The flue gas would be exiting the boiler at +5 to -10" of water column. Thus a pressure drop of 60" of water column across the scrubber increases the demand on the compressor and changes sizing of the compressor required to achieve the 15 barg desired outlet pressure. Finally the column 15-ft height design would require the column to be completely disassembled prior to transporting the PDU to Windsor, CT and reassembled on site. Since it is desired to transport and operate the PDU on an enclosed trailer to protect the equipment, a maximum equipment height of 9-10 ft was desired.

The Clean Air Group, a Croll Reynolds company, was able to modify their offering to minimize these concerns. Their design consisted of three sequential venturis which would achieve a similar particulate and acid gas removal as the prior design. The water usage was addressed by recycling the venturi water, potentially reducing the water usage by 70-80%, depending on the solids loading in the recycled water. The maximum estimated ash particulate loading from the boiler was 0.6 gm/scf. Use of the standard venturi over the high-energy design results in a net draft of 6" water column across the scrubber, instead of a 60" pressure drop. The higher level of particulate and acid gas removal is achieved by using the three in series. By replacing the packed tower with the sequential venturis, the system height was reduced from 15 to 8.5 ft, enabling the system to be contained within the enclosed trailer. The final Flue Gas Scrubber is shown in Figure 6.

Figure 6. Picture of flue gas scrubber (C301).

Compressor (K101):
Consultation with Air Products' engineering group indicated that the compressor would be a long lead-time item. Several compressor manufacturers were contacted and provided with equipment target specifications, including an estimate of the flue gas composition provided by Alstom (Table 4). The vendor recommendation was a custom-manufactured diaphragm compressor constructed of stainless steel to avoid corrosion from any condensed acid gas. Timing for the vendors ranged from 40 – 54 weeks at a cost of over $200,000. With this timing,

Table 4: Estimated flue gas composition

Component	% (vol)
CO_2	70 – 80
H_2O	5 – 10
O_2	5 – 8
N_2	7 -13
Ar	3 – 6
SO_2	2500 - 5000 (ppm)
NO_X	1000 - 2000 (ppm)

the team concluded that meeting the construction completion milestone by Q1FY09 would be difficult. To understand the materials of construction requirement, the team met with an Air Products' corrosion expert. A key element in the corrosion discussion was that the flue gas PDU would run only about one week every other month for a year during the Alstom test runs. Based on this level of operation, it was concluded that cast iron could be used for the compressor material of construction without concern about significant corrosion, as long as the compressor and intercoolers were flushed thoroughly after each run to remove any acidic condensate. Based on this information, the team conducted a second round of discussions with compressor vendors.

After further vendor quotes, the decision was made to order two Blackmer compressors (one primary, one back-up in case of corrosion problems). This option presented the best cost and schedule timing in order to keep the project on the desired path. The Blackmer HDL613 is a non-lubricated two stage reciprocating compressor capable of the desired flow at 15 barg outlet pressure, depending on the inlet pressure and cylinder speed. The compressor contains three sets of packing to form a two distance piece separating the cylinder and crankcase. A special coating was applied to the pistons and cylinders that is integral to the surface metal to minimize corrosion and piston wear. A liquid cooled inter-cooler and after-cooler as well as separator tanks to collect the condensate were purchased separately and installed by Air Products. One of the compressors and inter- and after coolers are shown in Figures 7-9.

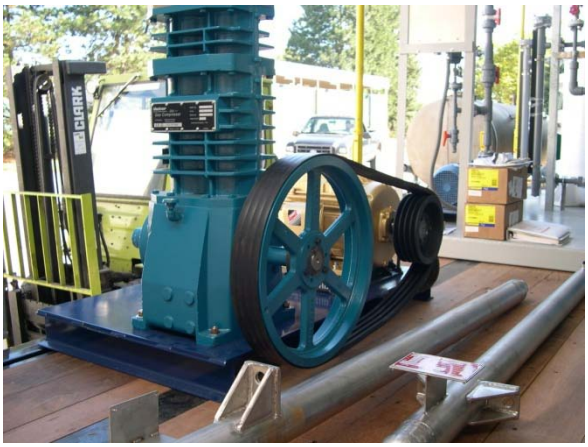

Figure 7: Compressor (K101).

Figure 8: Coalescers/catch tanks

Figure 9: Picture of compressor (K101) and the coalescers / catch tanks.

Reactor (C102):
A simulation of the Flue Gas PDU was been developed and used to model the reactions occurring within the reactor based on reaction mechanisms obtained from the literature. Simulations were conducted to understand the influence of liquid to vapor flow rates on SO_2 and NO_2 conversions, as well as overall residence time in the reactor. This information was used to

develop a design specification for the reactor and auxiliary equipment. The goal was to develop a design that provided for a wide range of variance in the operating conditions, thus providing maximum potential for learning. Air Products then chose a vendor based on those criteria. The reactor is shown on the assembled skid at the host site in Figure 10. Figure 11 shows the C301, K101, and C102 as part of the PDU at the host site.

Figure 10: Reactor (C102) on PDU trailer at the host site.

Figure 11: View of the PDU showing the C301, K101, and C102 at the host site

Trailer:
The project team held discussions with the Air Products Capital and Corporate Sourcing team to determine suitable options for transporting the PDU from Trexlertown, PA to Alstom in Windsor, CT. After contacting the various operating units, it was determined that Air Products did not have any trailers within the fleet that were less than the standard 48 ft. Because the potential site options at Alstom had size limitations on the trailer length of 40 ft, the team contacted trailer vendors to investigate options in that size range. It was concluded that a drop frame style taut liner trailer would be an optimal choice for transporting and housing the Flue Gas PDU. The taut liner style came with sliding curtains on both sides which allowed full utilization of the complete width and length of the trailer. This unlimited access to equipment significantly enhanced our ability to make equipment modifications with minimal downtime, thereby maximizing the data collection during the limited operating periods. The entire system is shown in Figure 12.

Figure 12: Views of the PDU at the host site.

Host Site:
The pilot scale field tests in Phases 1 and 2 were conducted by Air Products and utilized a slip stream provided by Alstom Power at their combustion facility in Windsor, CT. Alstom provides world-class coal combustion facilities, including 1) bench-scale fuel combustion testing, 2) pilot-scale fuel combustion testing and 3) 15 MWth combustion testing. Alstom Power committed to hosting the test unit (which Air Products will operate) and provided oxyfuel derived flue gas to the test unit when Alstom conducted their own oxy-coal combustion tests (a separate DOE project for oxy-combustion tests). Air Products signed a host agreement with Alstom Power. The assembled PDU was transported to the host site, connected to interconnects at the host site and commissioned. The entire unit was pressure tested, passed all of its functional tests, and was connected to the host site's boiler unit. Air Products maintained contact with the host site in order to adjust our plan to meet the host site's plan operation schedule. A preliminary and then a detailed Hazard Review of the project were conducted by a representative of Air Products' Environmental, Health, Safety, and Quality department following standard company policies. Air Products conducted the Operational Readiness Inspections (ORI) before commissioning the PDU. All open action items were addressed prior to start-up.

3.3 Phase 1 Task 3: Evaluate Reactor Performance for Purification CO_2 from Oxy-Coal Combustion.

The Phase 1 objectives for Task 3 included the evaluation of the reactor performance for purification of CO_2 from oxy-coal combustion. Air Products evaluated the reactor unit using oxy-coal derived flue gas generated on-site by Alstom Power. Alstom Power provided the oxy-coal combustion flue gas utilized in this Project. Air Products conducted the multi-day run using an actual coal-derived flue gas. Air Products also evaluated the performance of the reactor based on the reactor effluents and characterized the reactor effluents (both liquid and gaseous) using standard analytical techniques to assess any change in reactor performance.

There are several possible parameters for the PDU testing. Air Products defined the parameters for the test plan. The primary parameters of interest were the pressure of the reactor (7-15 bar), the residence time within the reactor, and the SOx level in the feed for the PDU. The SOx level was a function of the choice of the flue gas tie-in point, either the high sulfur or the low sulfur feed. The overall expected levels of SOx and NOx were used to determine the required analytical equipment. The initial model was run and test boundaries defined.

Phase 1 Experimental Results:
The entire unit was operated on both air and the desired oxyfuel-derived flue gas during January 26-30, 2010. A variety of flue gas compositions were encountered during the testing. Table 5 provides the observed ranges of the compositions (which includes both air and oxy firing conditions). After testing was completed, a potential point of air ingress was found.

A variety of process conditions were tested, including changes in SO_x and NO_x feed levels, to enable a broad understanding of the technology. Importantly, the initial data are quite promising, as high conversion (100% SO_x and 90% NO_x) of the impurities was observed (Figure 13). Figure 13 shows the analyzer switching every 15 minutes between the C102 inlet and effluent point. Thus inlet and effluent gas compositions were obtained. As shown in the figure, large reductions in SO_x and NO_x were observed. In addition, lower-conversion data useful for engineering design and process model validation were obtained. Analyses of the reactor liquids are consistent with acidic components such as sulfuric and nitric acids.

Table 5: Actual range of estimated overall flue gas compositions

Component	% (vol)
CO_2	15 – 85
H_2O	3 – 5
O_2	3 – 5
N_2	2 – 75
Ar	4 – 5
SO_2	600 - 2600 (ppm)
NO_X	125 - 400 (ppm)

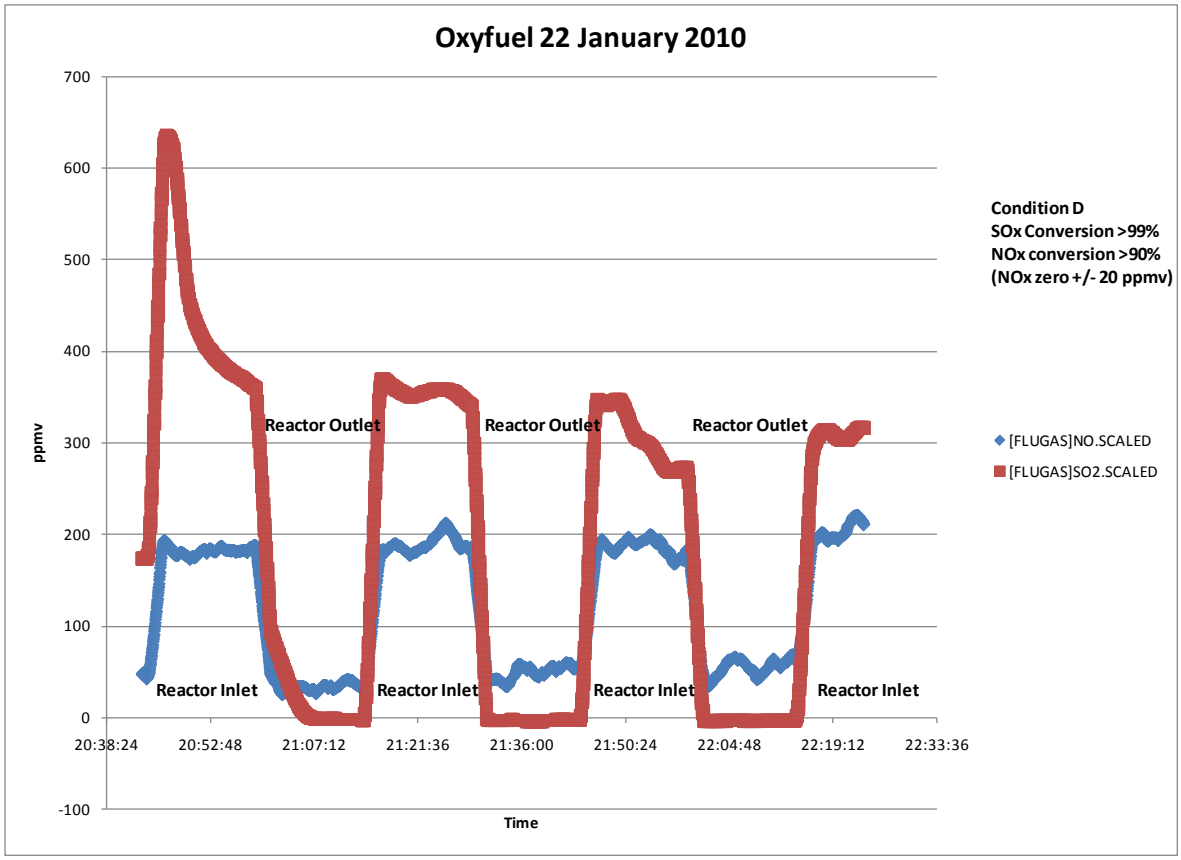

Figure 13: Phase 1 results from the oxyfuel test.

Phase 1 Results

- For the overall process, total SO_2 removal was 40-100% (based on gas compositions).
- For the overall process, total NO_x removal was 60-90% (based on gas compositions).
- The effects of variations in the SO_2/NO_x feed ratio, column pressure, gas flow rate and liquid recirculation on the reactor performance were elucidated. Process performance

was most sensitive to SO_2/NO_x feed ratio, over the range of parameter values investigated.

- SO_2 was removed from the flue gas through both sulfite and sulfate mechanisms.
- No evidence of NO_x removal was observed prior to compression, confirming that elevated pressure was required to accelerate the oxidation reaction of NO to NO_2 to a rate at which appreciable NO_x removal (as HNO_3) could be achieved. In Phase 2, we planned to change column operating parameters (particularly pressure) over a wider range, to better evaluate and quantify their respective impacts.

Modifications, improvements, and repairs to the PDU were made based on the observations during the first phase campaign. The next test campaign occurred at the end of April 2010, when we studied an additional coal type and broadened our understanding with more data collection.

3.4 Phase 2 Task 4: Evaluate Robustness of Reactor Performance for Purification CO_2 from Oxy-Coal Combustion.

The Phase 2 objectives for Task 4 included the evaluation of the robustness of the reactor performance for purification of CO_2 from oxy-coal combustion. Air Products evaluated the robustness of reactor performance using oxy-coal-derived flue gas generated on-site by Alstom Power. Air Products conducted more multi-day runs using an actual coal-derived flue gas. Air Products also evaluated the performance of the reactor based on the reactor effluents for different reactor pressures, as well as water recycle rates. As can be deduced from the reaction equations, pressure and water flow rates may have an important effect on the reaction rates and the overall reactor performance. Air Products characterized the reactor effluents (both liquid and gaseous) using standard analytical techniques to assess any change in reactor performance.

Phase 2 Results

In the Phase 2 campaign, Air Products again collected data in both the air-fired and oxy-fired modes. The measured CO_2 content of the flue gas was ~ 13 vol % in the air-fired mode and 45-70 vol % in the oxy-fired mode. Note that these numbers include a significant air ingress whose source we could not locate during the Phase 2 testing. (After the first campaign, we had corrected what we believed to be the source of air ingress during that campaign, but apparently we were unsuccessful in fully remediating the problem.) However, air ingress does not impact the results of the reactor performance. In both modes (air and oxy), O_2 content was 6-10 vol %.

For most of the testing, inlet SO_2 levels were quite high, resulting in SO_2 / NO_x ratios in excess of 15:1. However, a limited number of tests were completed at lower SO_2 / NO_x ratios of less than 3.0:1, by switching the point at which the flue gas was drawn from the Alstom process from upstream to downstream of their sulfur-removal step. The full range of SO_2 and NO_x compositions that were studied are shown in Table 6 (compositions measured at inlet to reactor column).

Table 6. Column inlet compositions

Component	ppm (vol)
SO_2	20 – 5930
NO_X	50 – 230
SO_2 / NO_x	0.2 – 81.0

By reproducing test conditions used in the January campaign, we were able to show consistent results between the two campaigns; confirming process and measurement reproducibility (see Figure 14).

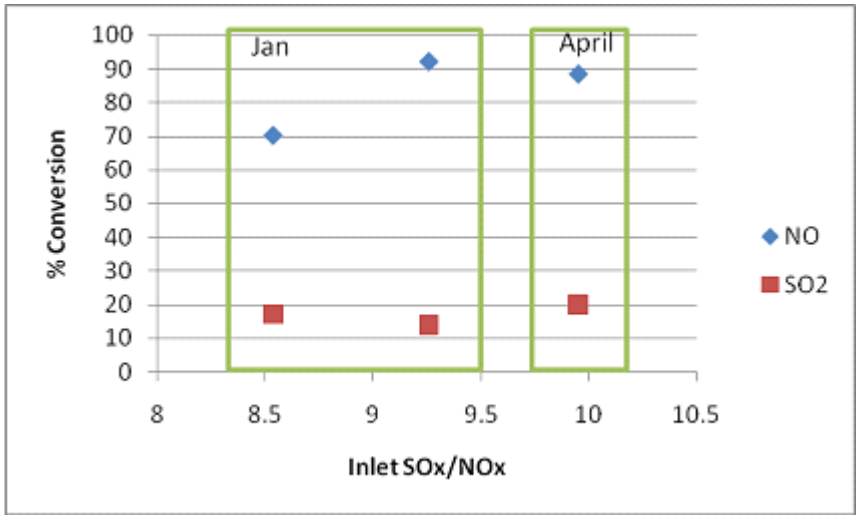

Figure 14: Comparison of NO and SO_2 conversions across January and April campaigns

A broad range of column inlet SO_x/NO_x ratios (0.15 – 85) was observed. SO_x conversion was found to decrease and NO_x conversion was found to increase with an increase in SO_x/NO_x ratio, as shown in Figure 15. Note that no SO_3 was observed, and the SO_x reported is entirely SO_2.

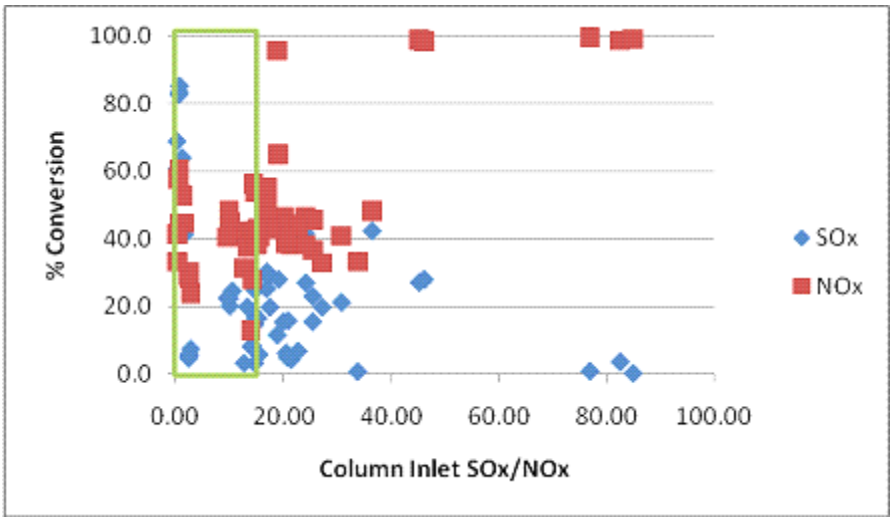

Figure 15: SO_x and NO_x conversions vs column inlet SO_x/NO_x ratio

Table 7. Representative column data from both the Phase 1 and 2 campaigns.

	High SO_2/NO_x Inlet	Low SO_2/NO_x Inlet
Start time	4/28/2010 16:25	1/22/2010 20:16
End time	4/28/2010 18:00	1/22/2010 20:43
Boiler mode	Oxy-coal	Oxy-coal
Column bypass	Open	Closed
P, psig	145.6	184.5
Temperature, °F	76.3	82.2
Recirc water flow, mol/hr	2994	4401
Makeup water flow, mol/hr	1250	0
Flow into rig - dry basis, mol/hr	1440.9	1463.0
Flow into column, mol/hr	1008.6	1552.9
Calculated air ingress, % of flue gas flow	35	35
CO_2, mol %	50.39	59.78
O_2, mol %	11.79	10.40
Column inlet:		
SO_2, ppm	2618	628
NO, ppm	65.4	192
NO_2, ppm	18.1	0
SO_2 / NO_x ratio	31.4	3.3
Column outlet:		
SO_2, ppm	1524	190
NO, ppm	17.6	26.1
NO_2, ppm	3.9	0
SO_2 conversion, %	41.8	69.7
NO_x conversion, %	74.2	86.4
Column sump:		
pH	2.02	1.45
Sulfate, mg/L	1900	57000
Sulfite, mg/L	2000	320
Nitrate, mg/L	25	360
Nitrite, mg/L	0	< DL
Total acidity, mg/l	5300	N/A

Table 7 details some representative column data from both the Phase 1 and 2 campaigns. The data helps to exemplify the range in SO_2/NO_x levels tested during the project.

During Phase 2, we also analyzed liquid samples collected at two experimental conditions for mercury (Hg) content. As shown in Table 8, the rate at which Hg was removed from the flue gas generally declined as the gas passed through the process, with the majority of the Hg being collected during the initial cool-down of the incoming flue gas, upstream of the atmospheric-pressure scrubber (C301). Of note, no Hg was observed in the liquid samples from the reactor / column (C102), suggesting that all Hg was removed at the point the flue gas exited our process.

Table 8: Representative liquid phase mercury analyses

Relative rate of Hg removal in liquid collected:	Expt. #1	Expt. #2
Pre-scrubber sump	1	1
Scrubber (C301)	0.0931	0
KO pot after 1st compressor stage	0.0022	0.0195
KO pot after 2nd compressor stage	0.0002	0.0047
Reactor / Column (C102)	0	0

3.5 Phase 2 Task 5: Model the Reactor Performance.

The Phase 2 objectives for Task 5 included modeling the reactor performance. Based on the experimental data obtained in Tasks 3 & 4, Air Products developed an engineering model to describe the 15 bar purification reactor performance. Air Products performed a sensitivity analysis using said model to elucidate those parameters most critical to performance.

Subsequent to the two campaigns, an engineering statistical model of the Sour Compression process was developed. Using the column inlet and outlet data, two correlations were regressed to represent the relationships between process parameters and SO_2 and NO_x conversions for Figures 16 and 17, respectively:

SO_2 conversion, % = 176.12 + 2.7377*(Pressure, psig)^0.5 + 1.8308*(Recirc flow, mol/hr)^0.25 + 0.6616*(Makeup flow, mol/hr)^0.5 - 0.000232*(Gas flow, mol/hr) - 161.85*(Inlet SO_2/NO_x ratio, mol/mol)^0.1

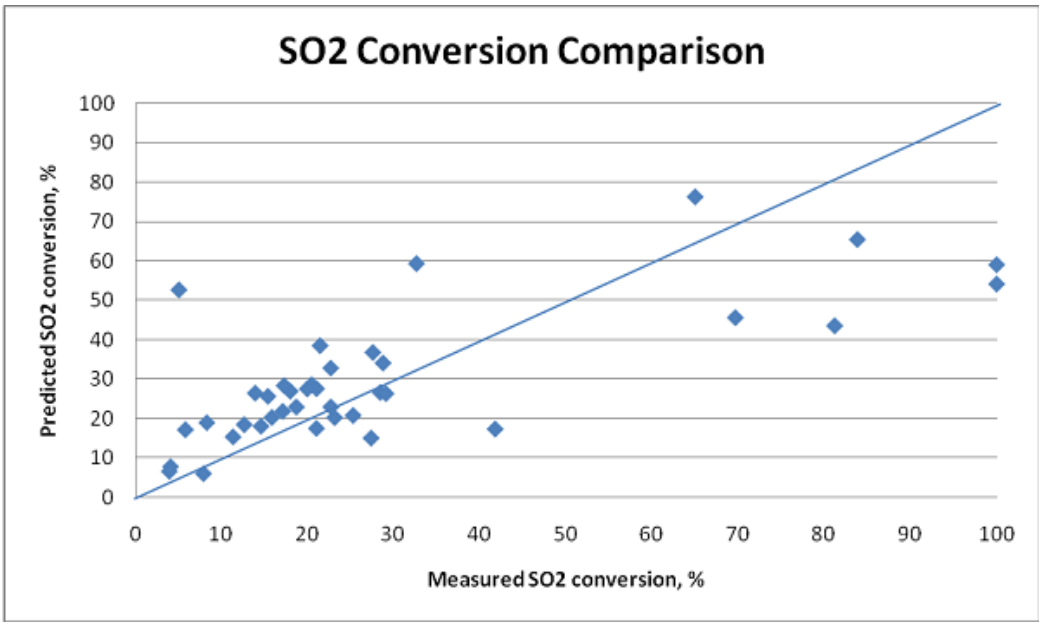

Figure 16: SO_2 conversion comparison

NO_x conversion, % = 27.82 + 0.288*(Pressure, psig) + 0.003097*(Recirc flow, mol/hr) - 0.00179*(Makeup flow, mol/hr) - 0.0114*(Gas flow, mol/hr) + 0.2932*(Inlet SO_2/NO_x ratio, mol/mol)

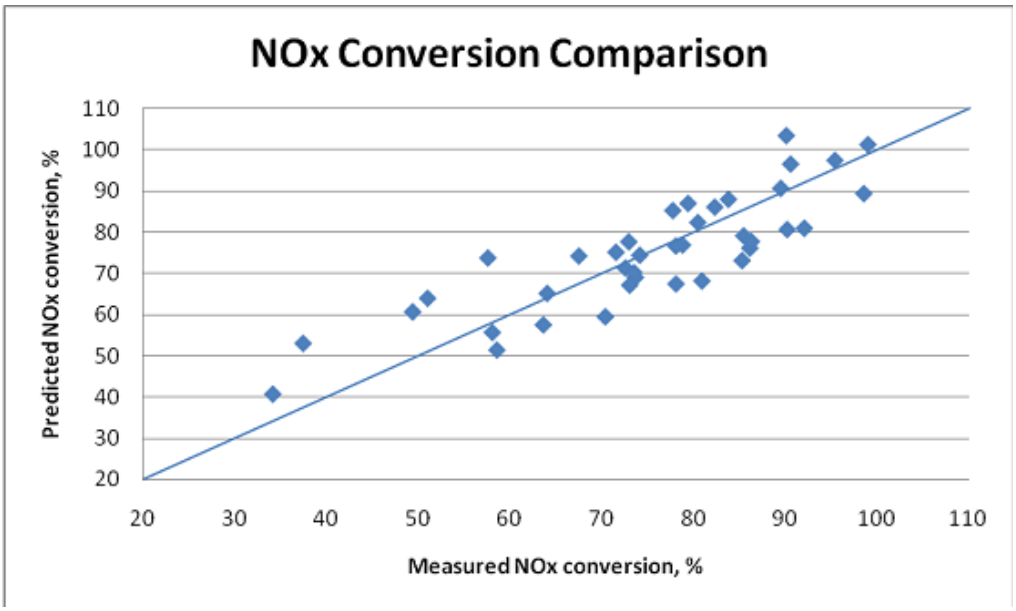

Figure 17: NO_x conversion comparison

The developed statistical reaction process model, using the data obtained during both campaigns, will aid in further understanding of the process.

.

The experimental program comprised 24 different conditions, including variations in the five primary column operating parameters: pressure, gas flow-rate, liquid recirculation flow-rate, fresh make-up water flow-rate and column inlet SO_x/NO_x ratio. The experiments were performed at ambient temperature, and 54 data-points, including replicates, were obtained. The effects of individual operating parameters on NO_x and SO_x conversion, with all other parameters held constant, was investigated, and a summary of the results is presented in Table 9.

Table 9. Impact of column operating parameters on SO_x and NO_x conversion

↑ in Operating Parameter	SO_x Conversion	NO_x Conversion
Column pressure	↑	↑
Column gas flow-rate	↓	↓
Column recirculation liquid flow-rate	↑	↑
Column fresh make-up water flow-rate	↑	↑
Column inlet SO_x/NO_x ratio	↓	↑

By combining online gas-phase composition measurements with liquid compositions obtained from samples collected at each process condition and subsequently analyzed by an outside lab, we were able to achieve molar balances for both S and N species of 80-120%. We consider this to be an acceptable result, considering the large number of measurements required to compute the balances (on the order of 40 separate component measurements and 15 separate process measurements).

4.0 Conclusions

This project consisted of the development of a comprehensive experimental and engineering evaluation to determine the feasibility of purifying CO_2 derived from an actual flue gas generated in a tangentially fired coal combustion unit operated in oxy-combustion mode. Air Products designed and constructed a 15 bar reactor system for removal of SO_X / NO_X from this CO_2-rich stream. The reactor unit was sited next to a 15 MW_{TH} tangentially fired oxy-coal combustion unit at Alstom Power Inc.

Multiple test periods were completed within two campaigns of the project. The 15 bar reactor system received a slip stream of 0.25 – 0.33 MW_{TH} equivalent flow rate from the Alstom unit for several days. This scale of operation is consistent with typical pilot-scale operations within Air Products, and thus the reactor system will be referred to as the flue gas pilot development unit (PDU). The flue gas PDU comprises three main units: scrubber/condenser, compressor, and reactor. The scrubber served to 1) operate as a high-efficiency fly ash particulate removal system, 2) provide significant removal of soluble acid gases (SO_2, SO_3 and HCl), and 3) cool the flue gas. Compression of the gas from slightly sub-atmospheric to about 15 barg occurred in a multistage adiabatic compressor unit, after which the flue gas was cooled prior to entering the reactor. In the reactor, the flue gas was contacted with water to obtain up to complete conversion of SO_2 to sulfuric acid and high conversion of the NO_X to nitric acid.

Air Products evaluated the reactor unit using oxy-coal-derived flue gas generated on-site by Alstom Power. Alstom Power provided the oxy-coal combustion flue gas utilized in the proposed project as part of another DOE proposal. Air Products conducted a multi-day run using an actual coal-derived flue gas. Air Products evaluated the performance of the reactor based on the reactor effluents and characterized the reactor effluents (both liquid and gaseous) using standard analytical techniques to assess any change in reactor performance. For the 15 bar column / reactor, this desired data is invaluable in determining reaction and mass transfer rates. The composition of *both* the exiting gas and liquids helped determine the effectiveness of the reactor system.

Next, Air Products evaluated the robustness of reactor performance using oxy-coal-derived flue gas generated on-site by Alstom Power. Air Products conducted more multi-day runs using an actual coal-derived flue gas. Air Products evaluated the performance of the reactor based on the reactor effluents for different reactor pressures, as well as water recycle rates. As can be deduced from the reaction equations, pressure and water flow rates may have an important effect on reaction rates and overall reactor performance.

Based on the experimental data obtained from the 15 bar reactor system experiments, and using established engineering fundamentals, Air Products developed an engineering model to describe the 15 bar purification reactor performance. Air Products then performed a sensitivity analysis using said model to elucidate those parameters most critical to performance.

5.0 Bibliography And References

1. R.J. Allam, V. White, N. Ivens and M. Simmonds, "The Oxyfuel Baseline: Revamping Heaters and Boilers to Oxyfiring by Cryogenic Air Separation and Flue Gas Recycle" in "Carbon Dioxide Capture for Storage in Deep Geologic Formations – Results from the CO_2 Capture Project Capture and Separation of Carbon Dioxide from Combustion Sources Volume 1," pp 451-475, Elsevier, 2005.
2. IEA Greenhouse Gas R&D Programme, Report 2005/09, "Oxy-Combustion for CO_2 Capture."
3. R.J. Allam and C.G. Spilsbury, "A Study of the Extraction of CO_2 From a Flue Gas of a 500 MW Pulverised Coal Fired Boiler," *Energy Convers. Mgmt*, Vol. 33, No. 5-8, pp 373-378, 1992
4. H. Tsukahara, et al, "Gas-Phase Oxidation of Nitric Oxide: Chemical Kinetics and Rate Constant," *Nitric Oxide: Biology And Chemistry*, Vol. 3, No. 3, pp 191-198, 1999.
5. V. White, R. Allam and E. Miller, "Purification of Oxyfuel-Derived CO_2 for Sequestration or EOR." GHGT-8, Trondheim, Norway, 2006.
6. R. Panesar, M. Lord, S. Simpson, V. White, J. Gibbins and S. Reddy, "Coal-Fired Advanced Supercritical Boiler / Turbine Retrofit with CO_2 Capture," GHGT-8, Trondheim, Norway, 2006.
7. K. Fogash and W. White ""Oxy-coal Combustion: Opportunities and Challenges - Purification of Oxyfuel-Derived CO_2," AIChE National Meeting, Salt Lake City, October 2007.
8. 2007 Report DTI 407: Coal-Fired Advanced Supercritical Boiler / Turbine Retrofit with CO_2 Capture.
9. 2007 Report CCPC / DTI 366: Future CO_2 Capture Technology Options for the Canadian Market.

6.0 Acknowledgements

Air Products would like to acknowledge the DOE/NETL for its contribution and our project officer, Timothy Fout, for his guidance. This report is based upon work supported by the Department of Energy's National Energy Technology Laboratory under Award Number DE-NT0005309. Air Products would also like to thank the host site, Alstom Power - Power Plant Laboratories - Boiler Simulation Facility in Windsor, CT, for all their assistance during the project.