PUBLISHED BY

INTECH

open science | open minds

World's largest Science, Technology & Medicine Open Access book publisher

2750+
OPEN ACCESS BOOKS

95,000+
INTERNATIONAL AUTHORS AND EDITORS

88+ MILLION
DOWNLOADS

BOOKS
DELIVERED TO 151 COUNTRIES

AUTHORS AMONG
TOP 1%
MOST CITED SCIENTIST

12.2%
AUTHORS AND EDITORS FROM TOP 500 UNIVERSITIES

THOMSON REUTERS BOOK CITATION INDEX INDEXED

Selection of our books indexed in the Book Citation Index in Web of Science™ Core Collection (BKCI)

Chapter from the book *Progresses in Chemical Sensor*
Downloaded from: http://www.intechopen.com/books/progresses-in-chemical-sensor

Interested in publishing with InTechOpen?
Contact us at book.department@intechopen.com

Chapter 8

Sensing Materials for Surface Acoustic Wave Chemical Sensors

Mohd Nizar Hamidon and Zainab Yunusa

Additional information is available at the end of the chapter

http://dx.doi.org/10.5772/63287

Abstract

Online real-time monitoring of gases requires a miniaturized, passive, and accurate gas sensor. Surface acoustic wave (SAW) devices possess these properties which make them suitable for gas-sensing applications. They have shown remarkable results in sensing of different gases in terms of sensitivity, selectivity, response, and recovery times. One of the important prerequisites a designer should know is to have knowledge on the different types of sensing material suitable for gas-sensing applications, prior to design and fabrication of the sensor. Different sensing materials, including metal oxides, polymers, carbon nanotubes, graphene, nanocomposites, etc. have been used for SAW gas sensors. In this article, different sensing materials for SAW gas sensors will be discussed.

Keywords: surface acoustic wave, gas sensor, carbon-based material, polymer, resonator

1. Introduction

Acoustic wave technology can offer the technology for gas detection and has been used for a variety of wireless sensor applications for some decades. The Surface Acoustic wave (SAW) technology has offered the development of small, lightweight, battery-free, maintenance-free, and multiple-sensor wireless interrogation operations [1]. SAW components have been used as filters or resonators in mobile phones in the telecommunication industry. They are also used as sensors for pressure, torque, acceleration, humidity, temperature, chemical, and biological applications. With the advent of modern technology, lots of efforts have been made by researchers to reduce air pollution by the development of highly responsive gas sensors. Different SAW configurations which include delay lines and resonators have proved to be reliable and showed

INTECH
open science | open minds

© 2016 The Author(s). Licensee InTech. This chapter is distributed under the terms of the Creative Commons Attribution License (http://creativecommons.org/licenses/by/3.0), which permits unrestricted use, distribution, and reproduction in any medium, provided the original work is properly cited.

good sensitivity, selectivity, and response time. The advantage of their small size and having tunable frequency has made them rather promising sensing devices.

In order to develop a highly sensitive sensor, knowledge for the selection of suitable sensing materials becomes rather critical. In this article, an insight into different sensing materials for SAW gas sensors is presented.

1.1. Sensing materials

As the gas sensor consists of a transducer and a sensing layer, the sensing layer therefore constitutes an important part of the SAW sensor. The mechanism of sensing is such that any changes in the conductivity, mass loading, viscoelastic effect, stress effect, as well as charge carriers from gas adsorption of the sensing material cause a corresponding frequency shift. This relationship had been represented by Sauerbrey [2]. It shows the relationship between the mass that has been deposited on the SAW device and the resonance frequency. Based on this equation, the density, shear modulus, loaded mass, and the type of piezoelectric substrate, all contribute to the sensing effect. When a sensing material is deposited on a SAW, there is viscoelastic effect on the SAW propagation, which leads to a shift in acoustic wave velocity and also changes in acoustic wave attenuation. The shift in wave velocity is as a result of mass loading, while the acoustic attenuation is led by the viscoelastic properties of the sensing material. Moreover, dynamic behavior significantly influences the response of the device. In case of polymers, there is an assumption that the device responds to the mass of the polymer film. This assumption is valid only if the film is rigid and moves synchronously with the surface of the resonator that is oscillating. As a result of the moving film, the kinetic energy produced causes a decrease in the resonant frequency. However, if the moving film does not move synchronously with the surface of the film, it causes a lag behind the resonator, and this creates a viscoelastic response.

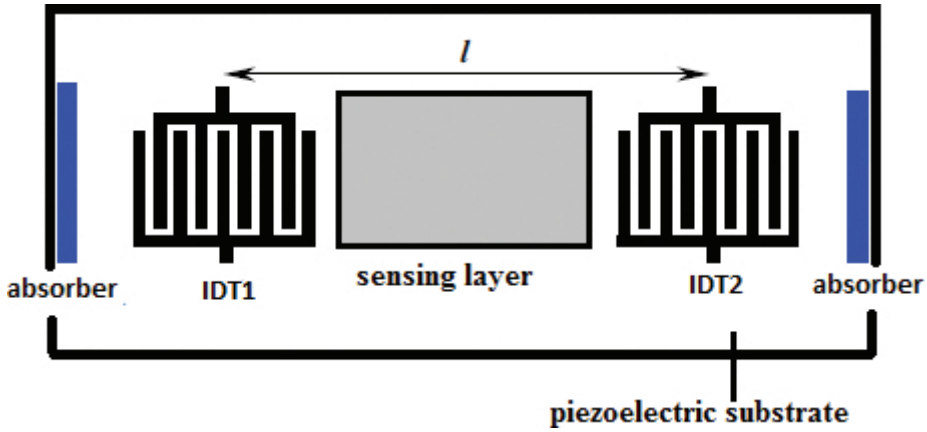

Figure 1. Two-port SAW delay line gas sensor.

The sensing layers are responsible for interacting with the different types of target gases. **Figure 1** depicts a SAW-based gas sensor which consists of the interdigital transducers (IDTs), reflectors, and the sensing layer. One-port and two-port SAW delay lines show the interdigital transducers (IDTs), reflectors, and the sensing layer. Surface acoustic waves are generated on a piezoelectric substrate with two sets of IDT. The first transducer converts electrical signal into acoustic wave, while the second converts this back to electrical signal. Rayleigh waves are usually used for gas-sensing applications [3]. The mechanism of SAW-based sensor is that when a thin sensing layer is applied on a piezoelectric substrate upon gas exposure, there is an interaction between the gas molecules and the sensing layer. This interaction will cause perturbations on the boundary conditions of the propagating SAW wave, which manifest as a change of velocity and attenuation of the propagating wave.

In order to choose a suitable sensing layer, several factors need to be considered. These factors include good selectivity toward the target gas, good response and recovery time, stability of the material over time, affordable cost, and nontoxicity of the material.

The sensitivity of the sensor is measured based on the output measurand of the sensor which could be voltage, current, resistance, or frequency. In the case of SAW sensor, the output is based on frequency; therefore, it is defined as $\Delta f/\Delta c$, where Δc is the change in analyte concentration. S is expressed in terms of Hz/ppm or Hz/vol. %. Similarly, in the case of resistive or conductometric sensor, the sensitivity is expressed as $\Delta R/R$ or $\Delta G/G$.

Therefore, knowledge of the different types of sensing material is essential for careful selection, so as to fulfill the above-mentioned characteristics.

There are different types of sensing materials used for gas-sensing applications. These include metal oxides, polymers, nanocomposites, carbon nanostructures which include nanotubes, nanofibers, graphene, and their composites, etc.

1.1.1. Metal oxides

The use of metal oxides as gas-sensing materials was first reported by Brattain and Berdeen in 1953 [4]. Since then, a lot of researches have been done toward investigation of different types of metal oxides for sensing applications. Metal oxides are materials which are widely used in different types of gas sensors.

The specific characteristic that makes them universal to be used in gas sensors includes high thermal stability which makes them suitable for applications in harsh environments. They also have good adaptability to different reducing or oxidizing gases by changing their electrical properties in the presence of gases. This conductivity change manifests as a change in resonance frequency, which is translated as the sensor signal.

Different types of metal oxides have been employed in SAW gas sensing for the detection of different gases. Metal oxides suitable for applications in SAW gas sensing include tin oxide (SnO_2), Indium oxide (In_2O_3), tungsten trioxide (WO_3), and zinc oxide (ZnO). These metal oxides have been employed as SAW sensing materials for the detection of different gases,

including hydrogen, ammonia, carbon monoxide, ethanol, etc. **Table 1** summarizes the types of metal oxides used for SAW gas sensing.

Author	Type of metal oxide	Gases detected	Temperature
Wang et al. [6]	In_2O_3	Hydrogen	Room
V.B Raj et al. [7]	ZnO, SnO_2, TeO_2	Ammonia	–
Duy Chan et al. [8]	Pt/ZnO	Hydrogen	Room
A.Z Sadek et al. [9]	ZnO	Hydrogen	200–300°C
Tang et al. [10]	Co_3O_4/SiO_2	Ammonia	Room
Tang et al. [11]	ZnO/SiO_2	Ammonia	Room
	ZnO		200°C-300°C

Table 1. Summary of some metal oxides for gas-sensing application.

1.1.1.1. SAW hydrogen metal-oxide based gas sensor

The first hydrogen SAW sensor was reported by D. Amico in 1982 [5], whereby palladium was used for hydrogen sensing; however, for improved sensitivities, metal oxides used for hydrogen sensing include indium oxide, zinc oxide, tungsten trioxide, etc. Indium oxide is also one of the metal oxides that is used for sensing both reducing and oxidizing gases. It has been widely used for the detection of different gases with improved sensitivities developed a SAW hydrogen sensor based on indium oxide at room temperature [6]. The experimental results showed a high sensitivity for hydrogen gas with a frequency shift of 11.83 kHz toward 400 ppm of hydrogen gas.

Zinc oxide was among the earliest metal oxides discovered and is widely used due to its good thermal and chemical stability and high conductivity of mobile electrons. However, the alignment of well-ordered nanostructure improves the performance of the sensor. Sadek [12] developed a ZnO nanorod SAW gas sensor for hydrogen detection. Results obtained showed good sensing performance when exposed to different hydrogen concentrations at operating temperatures of 200–300°C. The highest frequency shift was obtained at an operating temperature of 265°C.

In order to enhance the performance characteristics for hydrogen sensing at room temperature, many noble metals including Pd, Pt, Au, Ti, and Ni are employed. Duy-ThachPhan et al. [8] fabricated a SAW hydrogen gas sensor by using ZnO nanoparticles incorporated with a Pt catalyst. The integration of Pt/ZnO formed a layered structure on the SAW device in order to improve the sensitivity. Based on [13], Pt is the best catalyst to dissociate hydrogen atoms at room temperature. Experimental results obtained showed good results with a frequency shift of 55 kHz in 1% hydrogen concentration at room temperature.

1.1.1.2. SAW ammonia-based metal oxide sensors

The first SAW ammonia gas sensor was reported in 1987 in which platinum film was employed as a sensing layer for ammonia detection [14]. Since then, different types of materials are explored for ammonia sensing. Metal oxides used for ammonia sensing include WO_3, ZnO, Cobalt III oxide, etc.

WO_3 is one of the n-type semiconductor materials which have been employed for gas-sensing applications. Their property of having large surface–volume ratio has made them suitable for this purpose. Past researches have showed good sensitivity toward NO_2, H_2S, O_3, and H_2 [15–17]. It has been used as a sensing layer for the detection of concentrations of less than 1% of hydrogen gas in air [18]. However, for improved sensitivity, the structure of the tungsten trioxide was modified by sputtering platinum (Pt) and gold (Au) metals, and the sensing behavior was investigated at various operating temperatures [19].

Recently, nanowires have also been used on WO_3 in order to enhance the sensitivity and recovery times of hydrogen at room temperature [20]. In order to improve the sensitivity and selectivity, oxides are mixed with CNT to form composite and used for ammonia sensing. A highly sensitive ammonia gas sensor was fabricated using SnO_2/MWCNTs composites at room temperature [21].

In order to improve the sensitivity of SAW devices, layered SAW devices have been fabricated. Results obtained have shown an improved sensitivity, when compared to nonlayered devices [22]. The layered structure (**Figure 2**) shows a configuration with a ZnO intermediate layer and also WO_3 sensing layer.

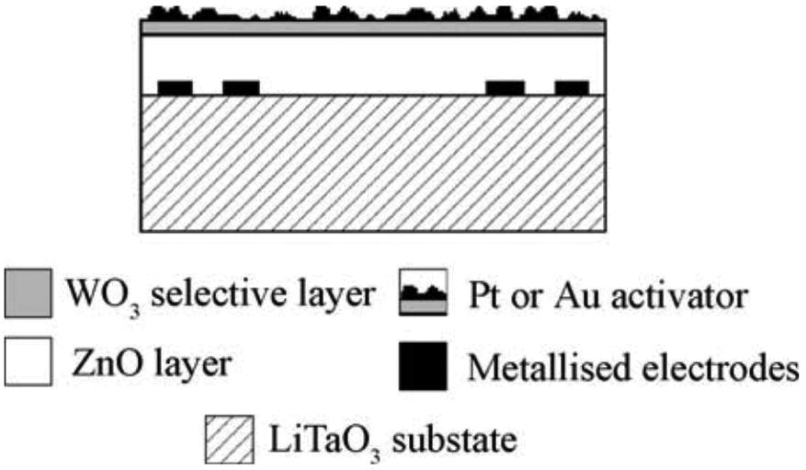

Figure 2. Layered SAW sensor [23].

The function of the intermediate layer is to increase the sensitivity arising from conductivity changes at the surface. It also traps the acoustic energy at the substrate. This configuration has been used for the detection of hydrogen [23, 24], ethanol vapor, and humidity [25].

Cobalt III oxide has also been considered as a p-type semiconductor, and it possesses the nonstoichiometric property. It has been used for sensing different gases, such as CO, H_2, C_2H_5OH, and NO_2 gases [4], but proved nonresponsive with ammonia gas. It also has the limitation of high operating temperatures above 200°C. Recently, Yong-Liang et al. fabricated a SAW-based ammonia gas sensor using hybrids of Co_3O_4/SiO_2[10]. Results obtained showed improved sensitivities when compared with pristine $Co_3O_4$and SiO_2.

Recently, different thin films of oxides were used in order to investigate the sensing behavior toward SAW-based ammonia gas sensor. Thin films of ZnO, SnO_2, TeO_2, and TiO_2 were deposited in the SAW sensor with the same thickness. Results obtained showed that the ZnO-coated SAW was found to be more sensitive toward liquor ammonia, compared to the other oxides [7].

1.1.2. Polymers as SAW sensing materials

Conductive polymers are another class of promising materials that are suitable for applications in gas sensing. The advantage of polymers over metal oxides is that they can work efficiently even at room temperature. Another advantage of conducting polymers is the ease of integration to the transducers of SAW device.

They comprise of carbon and hydrogen as the major constituents, while nitrogen, oxygen, sulfur, phosphorus, and halogens as minor constituents. The polymers that are promising for different sensing applications include polyacetylene, polythiophene, polypyrrole, polyaniline, etc. Polyaniline (Pani) and polypyrrole (PPy) are p-type semiconductors that are very unstable in the undoped state. These polymers have conjugated π-electronic system that changes electronically upon gas interaction.

When polymers are deposited to the SAW device and deployed for gas-sensing applications, the changes in the frequency are not due to the adsorption of gas/analyte, but as a result of the change in the modulus of the polymer [2] . The layers have an influence on the wave propagation velocity, which is dependent upon the viscoelastic effect of the polymers.

The viscoelastic responses of SAW could be in two forms. In the first mechanism, the response of the SAW is tracked by the velocity (v) changes related with the changes in storage modulus (G'), and the viscoelastic responses and attenuation (a) changes are related with the change in loss modulus (G''). Similarly, the second mechanism showed that in a thickness shear mode resonator, the movement of polymer films is not always synchronous with that of the surface of the device [26]. Rigid films with large value of G and phase lag move synchronously with the surface of the oscillating resonator, whereas compliant films with lower G and high tend to lag behind the resonator. Therefore, the phase shift is also one of the factors that leads to changes in the film dynamics and viscoelastic response. A model has been developed by Grate et al., in which the frequency shift was described as a resultant effect of vapor mass adsorption and the swelling of the polymer layer.

To improve the sensitivity, the surface of the SAW sensor can be modified using surface treatments so as to obtain selected chemical properties as reported by [27]. Polyisobutylene was employed as a sensing layer in a SAW sensor for the detection of perchloroethylene (PCE).

Ricco et al. [28] reported lead phthalocyanine (PbPc) conducting thin films employed as SAW sensing material for NO_2detection. Results obtained showed increase in sensitivity in the magnitude of 1000 times as compared with pure mass response of SAW devices. However, due to continuous exposure to gas, the sensor became oxidized, which leads to a drift in sensor signal. Humidity interference is one of the limitations of conducting polymers.

Polypyrrole nanofibers were used as a sensitive layer for hydrogen detection. They were synthesized using a template-free chemical process and deposited in the SAW sensor. Responses showed frequency shift of 20 kHz toward 1% of hydrogen gas and 4.5 kHz for 2.1 ppm of NO_2[29]. However, for improved sensitivities, bilayer structures of metal-free phthalocyanine (H_2Pc) with palladium (Pd) have been employed for hydrogen gas sensing at a very low temperature. To reduce the effect of humidity on gas sensing, a layer of polyethylene membrane was placed on the bilayer structure. Frequency shifts were observed for hydrogen concentrations between 0.5 and 4% [30].

Polythiophene nanofibers have also been used for hydrogen detection. They have also been synthesized using the template-free method and deposited on a layered SAW surface. Frequency shift was observed to be 17 kHz toward 1% of hydrogen concentration [31].

Similarly, polyaniline nanofibers were employed as a sensing layer for the detection of hydrogen gas. A cross section of the SAW sensor is shown in **Figure 3**. The nanofibers have been synthesized using electropolymerization process and then subsequently deposited on the SAW substrate. The thickness of the dedoped polyaniline was varied, and the response behavior to hydrogen gas was investigated. Frequency shifts were observed for all thicknesses, with the smallest thickness having frequency shift of 12.1 Hz for 0.06% of hydrogen, while the largest thickness SAW sensor gave a frequency shift of 9.2 kHz [32].

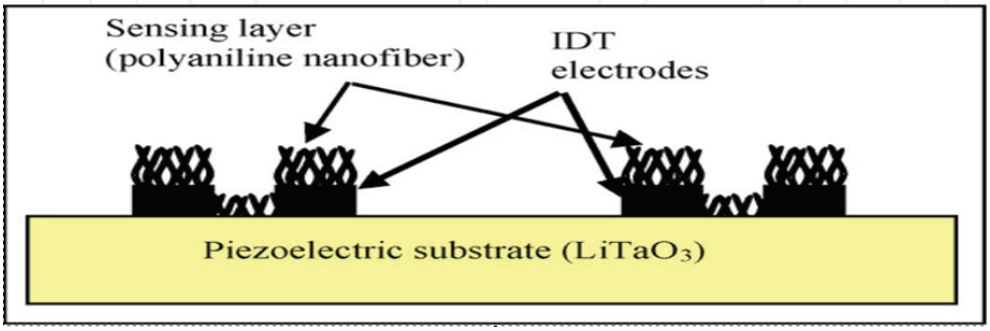

Figure 3. SAW gas sensor based on dedoped polyaniline nanofiber [32].

The integration of metal oxides with polymers has a great potential for increased sensitivity and selectivity at room temperature. As reported by [33], nanostructured polyaniline has the ability of high diffusion as a result of high surface-to-volume ratios and increased penetration depth for the gas molecules. Similarly, metal oxide nanoparticles are expected to improve sensor performance due to the grain size and high surface-to-volume ratios. Therefore, with the hybridization of polyaniline/SnO_2, hydrogen response is greatly enhanced with 30 s response time and 120 s recovery time to 1% hydrogen gas concentration at room temperature. The same authors [34] also reported the use of polyaniline/WO_3 sensing layer on a two-port SAW resonator for hydrogen detection at room temperature. Sensor performance was greatly improved with 40 s response time and 100 s recovery time to 1% hydrogen gas at room temperature.

Atashbar et al. developed a SAW-based sensor with camphorsulfonic acid (CSA) polyaniline nanofibers as a sensing layer for the detection of hydrogen at room temperature.

1.1.3. Carbon-based materials for gas-sensing applications

The advent of nanotechnology has attracted much interest into the use of carbon-based materials for gas-sensing applications. They possess inherent properties that make them attractive, which include high thermal and mechanical stabilities, high surface area, and good metallic and semiconducting behaviors. Carbon-based materials include carbon nanotubes (CNTs), nanofibers, nanobelts, nanorods, graphene, etc. The employment of CNTs for different gas-sensing applications is more common among researchers.

CNTs are of two types: single-walled carbon nanotubes (SWCNTs) and multi-walled carbon nanotubes (MWCNTs). A SWCNT is formed from a roll of graphene formed into a cylinder with diameters ranging from 0.4 to 2 nm, while MWCTs are formed from several layers of graphene rolled into nested rings of cylinder. They can be synthesized using three methods: laser ablation, arc-discharge, and chemical vapor deposition. Pristine CNTs possess very strong sp^2 carbon–carbon bonds, which gives them a very good stability. Their small diameter and hollow structure make them suitable for gas adsorption and detection. The small diameter allows electrical signals flowing along the tube to interact with any slightest defects within or outside the tubes. Both MWCNTs and SWCNTs are suitable for gas detection due to their semiconducting and metallic behaviors.

1.1.3.1. Gas sensors based on MWCNTs

MWCNTs have been used successfully for the detection of different gases, CO, NO_2, H_2,NH_3, and N_2[35]. Their drawbacks arelong recovery time as shown by and that sensing is required at high temperature [36–38]. Jayatissa [39] investigated the detection of hydrogen gas using MWCNT films synthesized by CCVD. Sensing of hydrogen gas was observed only at temperatures between 150 and 300°C, but there was no sensing at higher temperature (400°C) or low temperature (25°C). Similarly, MWCNT-based sensor was also employed for the detection of NO; to increase the sensitivity, an electric field was introduced between the two copper plates, with one of them containing the MWCNT silicon wafer. It was observed that the stronger the

electric field applied, the better the sensitivity would be [40]. Sayago [37] fabricated an NO_2gas sensor using double-walled and MWCNT, respectively. Sensing was observed at 25–250°C toward NO_2, but not H_2or NH_3. Good sensing response was only observed at temperatures higher than 100°C.

Similarly, Penza et al. [41] fabricated a SAW gas sensor based on SWCNT and MWCNT for the detection of volatile organic compounds. The CNTs were deposited on the SAW transducer using the spray painting technique, as shown in **Figure 4**. Results obtained showed high sensitivity toward ethanol, ethyl acetate, and toluene at room temperature. The authors observed and reported that the SWNT showed a higher sensitivity than the MWCNT solvent for the dispersion of the CNT, and also affects the sensing behavior. The sensing ability of SWNT is better than the MWCNT, because the SWNT could be either metallic or semiconducting. The higher response of SWNT sensor could be attributed to high number of semiconducting tubes, as shown by [42].

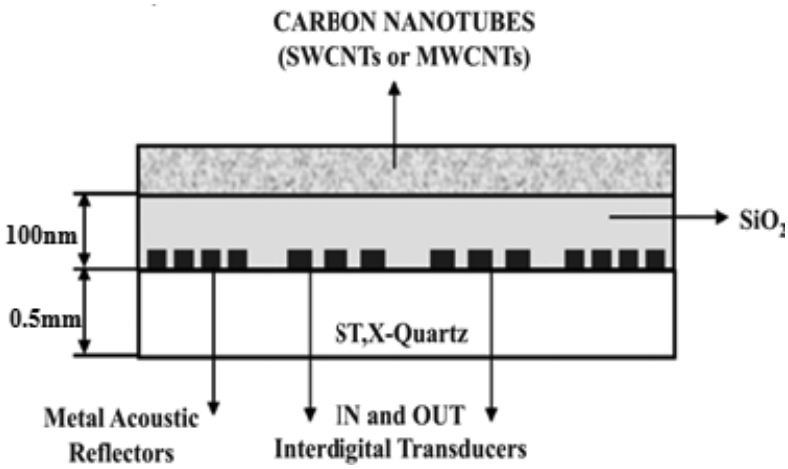

Figure 4. SAW gas sensor based on carbon nanotubes [43].

The response of the sensor was monitored as a change in resonant frequency of the SAW resonator. It was observed that there is a downshift in frequency for SAW sensors coated with MWCNT/SWCNT dispersed in toluene toward ethanol, while an upshift in frequency was recorded for SAW sensors coated with MWCNT/SWCNT dispersed in ethanol toward ethyl acetate. This increase/decrease in resonant frequency is as a result of the mass loading effect due to the molecules adsorbed on the surface of the nanotubes. This effect is manifested as perturbations in the velocity of propagation. The change in resonant frequency is directly proportional to the mass of gas that has been adsorbed.

Similarly, Cava et al. [44] employed the use of MWCNT film prepared by self-assembly technique as a sensing layer for oxygen sensor. Oxygen sensitivity was observed when the sensors were exposed to 10% oxygen in nitrogen at a temperature of 160°C. It was observed

that sensors prepared by the drop-casting method were less sensitive compared with those prepared by self-assembly method. This is because the self-assembly method provides a much better distribution of the carbon nanotubes, which gives it the ability for improved gas adsorption property.

However, the limitations of using pristine CNT as a sensing material are long recovery time, low sensitivity, and sensing achieved usually at high temperature. As reported by [45], it was established that CNT-based sensors do not give response to CO and H gases at room temperature. Therefore, surface functionalization of the CNT using noble metals such as palladium or platinum is required for sensing of CO and hydrogen at room temperature [46]. Functionalization using noble metals enhances the conductivity of the CNT and thus increases sensitivity. It allows for free movement and charge transfer between the ions and the gas molecules.

Carbon nanotubes are materials which have inherent electrical and mechanical properties, and they have a hollow structure. These properties make them suitable candidates for gas sensing. Their main limitation when employed as gas-sensing materials for SAW resonators in their pristine form is that they cause short circuit of the IDTs. Therefore, to deposit the sensing layer successfully and to overcome the problem of short circuit, an insulating/guiding layer needs to be created between the IDTs and the sensing layer to form a layered structure as shown in **Figure 4**.

It has dual advantages: it serves as a guiding layer by protecting the IDTs, and it also increases the conductivity. Silicon oxide is also another type of insulating layer and has been employed for gas-sensing applications. As reported by Penza et al. [41], a two-port SAW resonator was developed for volatile organic compounds (VOCs) sensing, to deposit the sensing layer which is composed of single-walled and multi-walled carbon nanotubes; an SiO_2 insulating layer was sputtered so as to function as a guiding layer for SAW and protection of the metallic coating. Carbon nanotubes were then sprayed with an airbrush. Response of carbon nanotubes toward VOCs was then observed.

Similarly, the same authors [43] developed a SAW two-port resonator for the detection of VOCs using similar structure, with SiO_2 as an insulating layer of thickness 100 nm. Some researches employ the use of layered structure for sensing layer. The layered structure has dual function: to serve as a guiding layer and to increase the sensitivity. This could be seen in [47] was fabricated using $ZnO/LiTaO_3$ substrate and the ZnO serves as the guiding layer for the electrodes and also to enhance the sensitivity. Single-walled carbon nanotubes were then deposited using the Langmuir–Blodgett technique, and then tested toward hydrogen, ammonia, and nitrogen oxide gases, respectively.

A double surface acoustic wave resonator system was proposed by [48], as shown in **Figure 5**. In this system, the sensing layer will be fabricated and integrated separately from the SAW resonators. This will eliminate the use of guiding layer and the short circuiting of the IDTs as a result of deposition of CNT. The system was successfully used for the detection of hydrogen from 1 to 2% with functionalized CNT/Pani sensing layer.

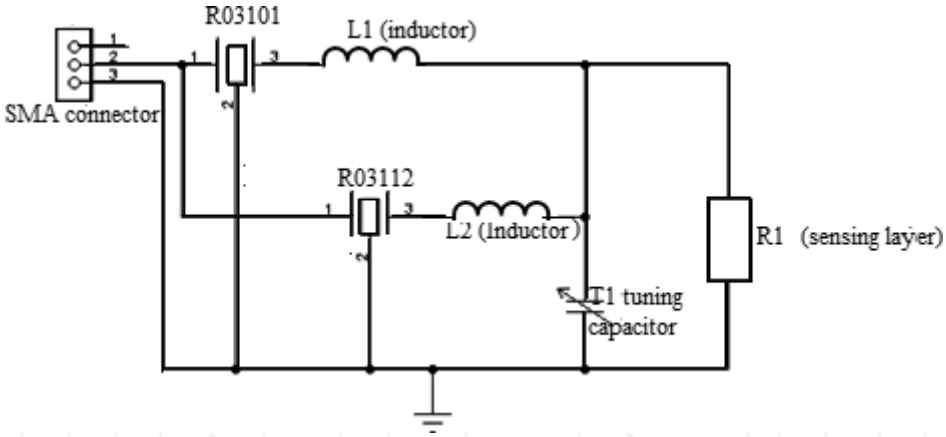

Figure 5. DSAWR system for gas-sensing applications [48].

Recently, Arab et al. [49] developed a SAW resonator gas sensor for acetone detection using MWCNT/cerium oxide nanocomposites. Preliminary results using pristine MWCNT caused short circuit to the IDTs, which is due to their high metallic behavior, and such MWCNTs were mixed with cerium oxide so as to reduce this metallic behavior and prevent the IDTs from short circuit. This gave good response to acetone vapor and ethanol at room temperature.

1.1.3.2. Gas sensors based on CNTs/nanocomposites and polymers

Conducting polymers are among the organic polymers that are suitable and promising materials for gas-sensing applications as could be recalled from Section 1. To enhance their sensitivity, conducting polymers are combined with CNTs because of their instability when used as gas-sensing material alone. However, due to the inability of sensing CO gas at room temperature using SWNT but only at elevated temperatures [50]. However, Choi et al. investigated the electrical properties of PANI/SWNT as a composite sensing material for the detection of CO and ammonia. Results obtained showed that the composite material was more responsive toward ammonia than CO gas with increased conductance for CO but decreased conductance toward ammonia [38] .

Similar to polymers, nanocomposites are also another group of promising materials that could be used to enhance gas-sensing performance. This is due to their high surface area, chemical, and mechanical properties. Nanocomposites could be integrated with metal oxides, polymers, and carbon nanotubes for improved performance. The response of polymers and CNT composites has also shown improved performance. It was established that the CNTs–polymer composites could be used to improve the mechanical properties and stabilization [45]. This is because when the CNT is integrated inside the polymer matrix, more mechanical support is provided in the arrangement of the polymer chain structure.

Sayago et al. [51] investigated the sensing behavior of hybrid polymers when used as a sensing material. A SAW gas sensor was fabricated using polyepichlorohydrin (PECH) and polyether

urethane (PEUT) with different ratios of MWCNTs. Solutions of the nanocomposites were prepared with different weights of the MWCNTs and polymers, and ultrasonicated. The solutions were deposited using airbrush spraying with a metallic mask on the sensitive layer only. The sensor was tested toward volatile organic compounds, such as octane and toluene, and also toward different gases including hydrogen, ammonia, nitrogen dioxide, and carbon monoxide. Results obtained showed good response toward octane and toluene, but there were no responses to any of the gases. This means that the composite materials do not have good selectivity toward the gases but rather toward volatile organic compounds only.

Similarly, nanocomposites based on CNT and metal oxides can also be promising sensing materials. David et al. [49] employed the use of MWCNT/Ceria nanocomposites as sensitive layers for SAW gas sensor. The sensor was tested toward acetone and ethanol vapors. Frequency shifts obtained showed higher response toward acetone vapor with a frequency shift of 200 kHz at room temperature.. Similarly, nonconducting polymers could also be another class of polymers that could be used as nanocomposite materials for gas sensing. Chee Song et al. [50] fabricated a SAW gas sensor polyvinylpyrrolidone (PVP)/MWCNT nanofiber composites for hydrogen detection. The nanofibers were synthesized by electrospinning the composite solution deposited directly on the active layer of the SAW. Frequency shifts were observed with 530 Hz for 1% hydrogen concentration and 11.322 kHz of 0.25% hydrogen concentration for PVP concentrations of 1.525 and 1.025 g, respectively. This shows that the sensor with a low PVP concentration gave a higher frequency shift.

Recently, it was established that carbon nanotubes with metal nanoparticles could also be used as promising sensing materials. Mohsen Asad et al. [51] fabricated a SAW gas sensor based on thin film of single-walled carbon nanotubes decorated with copper nanoparticles as a sensing layer, which was deposited using drop-casting method. The sensor was tested toward different gases, and the effect of temperature on the sensor response was investigated. The SAW sensor was tested toward hydrogen, acetone, ethanol, and hydrogen sulfide, so as to investigate its selectivity. The highest selectivity was observed toward hydrogen sulfide gas.

1.1.3.3. Gas sensors based on graphene

Graphene is a two-dimensional form of carbon that possesses unique properties. Due to its low resistance and large surface area to volume ratio, it has shown to be a promising sensing material. In recent years, graphene and its derivatives such as pristine graphene, graphene oxide, and reduced graphene oxide (RGO) have been reported for different gas-sensing applications in the detection of different gases, including H_2O, NO_2, CO, and NH_3. The sensor response is measured as a change in the resistance of the graphene film. However, graphene has not been popularly employed in SAW gas sensors.

Guo [53] developed a SAW humidity gas sensor that is based on graphene. It was reported that for low relative humidity of less than 50%, a downshift of 1.38 kHz was observed, which was as a result of mass loading effect due to water adsorption by the graphene surface. Mass loading effect was observed to be less effective at high temperatures.

Thomas et al. [54] also developed a low-cost Rayleigh SAW resonator coated with a layer of graphene. Exfoliated reduced graphene oxide (RGO) dots were deposited in the sensing region, as shown in **Figure 6**. The sensor was deployed for the detection of different concentrations of NO_2 in air, and it exhibited good sensitivity of 25 Hz/ppm at low power and cost.

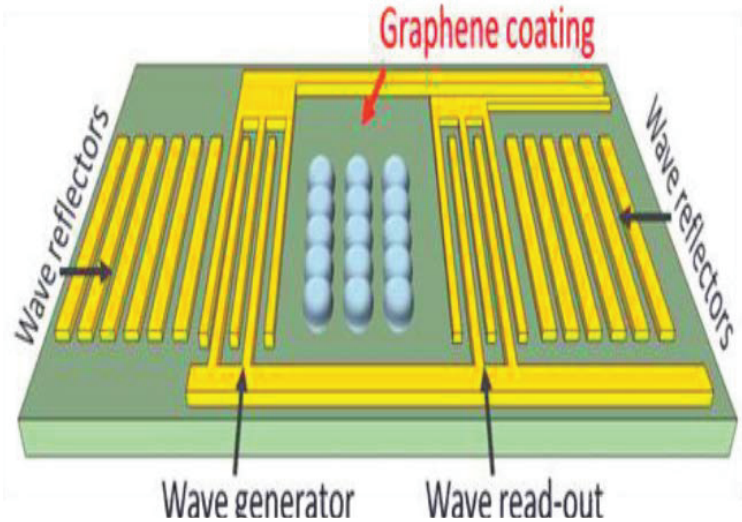

Figure 6. SAW resonator coated with graphene for NO_2 detection [54].

Similarly, Arsat et al. [55] reported SAW gas sensor based on graphene-like nanosheets deposited on $LiTaO_3$. Graphene was synthesized by reduction of graphite oxide and deployed for detection of H_2 and CO at room temperature and 40°C. A frequency downshift was observed with CO and an upshift with H_2. This was speculated to be as a result of incomplete reduction of GO with hydrazine.

1.2. Conclusion and Outlook for Researchers

SAW-based gas sensors have proved to be reliable and promising in terms in sensitivity, selectivity, high response, and recovery times. Increased sensitivity and selectivity are among the key parameters a designer requires during the development of the sensor. As the sensing layer is an integral part of the sensor, therefore knowledge of an appropriate sensing material is vital for researchers. Different sensing materials which include metal oxides, polymers, carbon nanostructures (carbon nanotubes and graphene), with their composites, have been reviewed in this article. One of the limitations of polymers when employed as gas-sensing materials is that after repeated measurements, there tends to be humidity interference. Therefore, researchers should devise a way of regeneration of the polymer, so as to maintain reproducibility during measurement. Similarly, pristine carbon nanotubes, due to their metallic nature, have limitations when employed as sensing material, because they cause short

circuit of the IDTs. For sensing applications that require CNTs, a guiding layer needs to be fabricated which makes the design more costly.

Due to the interesting features of graphene, which include low cost, high surface area to volume ratio, and ease of processing, it has been shown to be a promising sensing material. However, not much literature has been reported for graphene in SAW-based gas sensors. Therefore, researchers could explore more applications of graphene as sensing material for SAW gas sensors. Graphene and its oxides are promising sensing materials due to production of less expensive and highly sensitive gas sensors. Therefore, future works should focus on employing hybrids of graphene, including graphene oxides such as ZnO, WO_3, SnO_2, CO_3O_4, etc., as gas-sensing materials. Similarly, single-layer graphene and few-layer graphene have good mechanical strength and high temperature tolerance, which makes them good candidates for sensing materials, based on literature that they have not been exclusively used for SAW gas sensors. It is therefore recommended that future works should incorporate them.

Different methods have been used for synthesis of graphene, including epitaxial growth, unzipping of CNT, mechanical exfoliation, and chemical vapor deposition, among others. Graphene produced from each technique tend to have different properties. It was shown by Saleh-Khojin et al. [56] that sensors made of CVD-grown graphene nanoribbon exhibit much higher sensitivity to gases than defect-free graphene that is produced by Scotch tape method, which is due to adsorption of gas molecules at the edges of the graphene surface. GNRs have been synthesized using CVD by [57]; therefore, work is ongoing on the application of these GNRs in gas sensing.

Author details

Mohd Nizar Hamidon[1*] and Zainab Yunusa[2]

*Address all correspondence to: mnh@upm.edu.my

1 Faculty of Engineering, Department of Electronic Engineering, Universiti Putra Malaysia, Serdang, Selangor, Malaysia

2 Faculty of Engineering, Department of Electrical Engineering, Bayero University KanoKano, Nigeria

References

[1] M. N. Hamidon, "Fabrication of High Temperature Surface Acoustic Wave Devices for Sensor Applications," University of Southampton, 2005.

[2] A. Mujahid and F. L. Dickert, "SAW and Functional Polymers," 2013.

[3] B. Drafts, "Acoustic wave technology sensors," *IEEE Trans. Microw. Theory Tech.*, vol. 49, pp. 795–802, 2001.

[4] N. Barsan, D. Koziej, and U. Weimar, "Metal oxide-based gas sensor research: how to?" *Sens. Actuators B Chem.*, vol. 121, no. 1, pp. 18–35, 2007.

[5] T. Hübert, L. Boon-Brett, G. Black, and U. Banach, "Hydrogen sensors—a review," *Sens. Actuators B Chem.*, vol. 157, no. 2, pp. 329–352, 2011.

[6] C. Wang, Y. Wang, S. Zhang, L. Fan, and X. Shui, "Characteristics of SAW hydrogen sensors based on InO_x /128° YX-$LiNbO_3$ structures at room temperature," vol. 173, no. 2, pp. 710–715, 2012.

[7] V. B. Raj, H. Singh, A. T. Nimal, M. Tomar, M. U. Sharma, and V. Gupta, "Effect of metal oxide sensing layers on the distinct detection of ammonia using surface acoustic wave (SAW) sensors," *Sens. Actuators B Chem.*, vol. 187, pp. 563–573, 2013.

[8] D.-T. Phan and G.-S. Chung, "Surface acoustic wave hydrogen sensors based on ZnO nanoparticles incorporated with a Pt catalyst," *Sens. Actuators B Chem.*, vol. 161, no. 1, pp. 341–348, 2012.

[9] A. Z. Sadek, W. Wlodarski, K. Shin, R. B. Kaner, and K. Kalantar-zadeh, "A polyaniline/WO_3 nanofiber composite-based ZnO/64° YX $LiNbO_3$ SAW hydrogen gas sensor," *Synth. Met.*, vol. 158, pp. 29–32, 2008.

[10] Y.-L. Tang, Z.-J. Li, J.-Y. Ma, H.-Q. Su, Y.-J. Guo, L. Wang, B. Du, J.-J. Chen, W. Zhou, Q.-K. Yu, and X.-T. Zu, "Highly sensitive room-temperature surface acoustic wave (SAW) ammonia sensors based on CO_3O_4/SiO_2 composite films," *J. Hazard. Mater.*, vol. 280C, pp. 127–133, 2014.

[11] Y. L. Tang, Z. J. Li, J. Y. Ma, Y. J. Guo, Y. Q. Fu, and X. T. Zu, "Ammonia gas sensors based on ZnO/SiO_2 bi-layer nanofilms on ST-cut quartz surface acoustic wave devices," *Sens. Actuators B Chem.*, vol. 201, pp. 114–121, 2014.

[12] A. Z. Sadek, W. Wlodarski, Y. X. Li, W. Yu, X. Li, X. Yu, and K. Kalantar-zadeh, "A ZnO nanorod based layered ZnO/64° YX $LiNbO_3$ SAW hydrogen gas sensor," vol. 515, pp. 8705–8708, 2007.

[13] J. L. H. T Wang, B. S Kang, F. Ren, L. C Tien, P. W Sadik, D. P Norton, and S. J Pearton, "Detection of hydrogen at room temperature with catalyst-coated multiple ZnO nanorods," *Appl. Phys.*, vol. 81, pp. 1117–1119, 2005.

[14] W. P. Jakubik, "Surface acoustic wave-based gas sensors," *Thin Solid Films*, vol. 520, no. 3, pp. 986–993, 2011.

[15] M. Penza, M. Tagliente, L. Mirenghi, C. Gerardi, C. Martucci, and G. Cassano, "Tungsten trioxide (WO_3) sputtered thin films for a NO_x gas sensor," *Sens. Actuators B Chem.*, vol. 50. pp. 9–18, 1998.

[16] I. Jiménez, J. Arbiol, G. Dezanneau, A. Cornet, and J. R. Morante, "Crystalline structure, defects and gas sensor response to NO_2 and H_2S of tungsten trioxide nanopowders," *Sens. Actuators B Chem.*, 2003, vol. 93, pp. 475–485.

[17] H. Nakagawa, N. Yamamoto, S. Okazaki, T. Chinzei, and S. Asakura, "A room-temperature operated hydrogen leak sensor," *Sens. Actuators B Chem.*, 2003, vol. 93, pp. 468–474.

[18] S. Okazaki, H. Nakagawa, S. Asakura, Y. Tomiuchi, N. Tsuji, H. Murayama, and M. Washiya, "Sensing characteristics of an optical fiber sensor for hydrogen leak," *Sens. Actuators B Chem.*, vol. 93, no. 1–3, pp. 142–147, 2003.

[19] S. J. Ippolito, S. Kandasamy, K. Kalantar-zadeh, and W. Wlodarski, "Layered SAW hydrogen sensor with modified tungsten trioxide selective layer," vol. 108, pp. 553–557, 2005.

[20] J. Kukkola, M. Mohl, A.-R. Leino, J. Mäklin, N. Halonen, A. Shchukarev, Z. Konya, H. Jantunen, and K. Kordas, "Room temperature hydrogen sensors based on metal decorated WO_3 nanowires," *Sens. Actuators B Chem.*, vol. 186, pp. 90–95, 2013.

[21] N. Van Hieu, L. T. B. Thuy, and N. D. Chien, "Highly sensitive thin film NH_3 gas sensor operating at room temperature based on SnO_2/MWCNTs composite," *Sens. Actuators B Chem.*, vol. 129, no. 2, pp. 888–895, 2008.

[22] A. Z. Sadek, W. Wlodarski, K. Shin, and R. B. Kaner, "A layered SAW gas sensor based on a polyaniline/In_2O_3 nanofiber composite," vol. 17, no. 2, pp. 4488–4492, 2007.

[23] S. J. Ippolito, S. Kandasamy, K. Kalantar-Zadeh, and W. Wlodarski, "Layered SAW hydrogen sensor with modified tungsten trioxide selective layer," *Sens. Actuators B Chem.*, vol. 108, pp. 553–557, 2005.

[24] K. Kalantar-Zadeh, D. A. Powell, W. Wlodarski, S. Ippolito, and K. Galatsis, "Comparison of layered based SAW sensors," *Sens. Actuators B Chem.*, vol. 91, pp. 303–308, 2003.

[25] S. J. Ippolito, A. Ponzoni, K. Kalantar-zadeh, and W. Wlodarski, "Layered WO_3/ZnO/36° $LiTaO_3$ SAW gas sensor sensitive towards ethanol vapour and humidity," vol. 117, pp. 442–450, 2006.

[26] G. C. Frye and S. J. Martin, "Velocity and attenuation effects in acoustic wave chemical sensors," *IEEE Ultrason. Symp.*, pp. 379–384, 1993.

[27] S. J. Martin, G. C. Frye, J. J. Spares, and A. Butler, "Gas sensing with acoustic devices," *IEEE Ultrason. Symp.*, pp. 423–434, 1996.

[28] O. G. Ricco AJ, Crooks RM, "Surface acoustic wave chemical sensor arrays new chemically sensitive interfaces combined with novel cluster analysis to detect volatile organic compounds and mixtures," *Accounts Chem. Res.*, vol. 31, no. 5, 1998.

[29] L. Al-Mashat, H. D. Tran, W. Wlodarski, R. B. Kaner, and K. Kalantar-Zadeh, "Polypyrrole nanofiber surface acoustic wave gas sensors," *Sens. Actuators B Chem.*, vol. 134, pp. 826–831, 2008.

[30] S. Kochowski, J. Bodzenta, W. P. Jakubik, and M. W. Urban, "Bilayer structure for hydrogen detection in a surface acoustic wave sensor system," vol. 82, pp. 265–271, 2002.

[31] L. Al-Mashat, H. D. Tran, R. B. Kaner, R. Arsat, K. Kalantar-Zadeh, and W. Wlodarski, "A hydrogen gas sensor fabricated from polythiopene nanofibers deposited on a 36 YX $LiTaO_3$ layered surface acoustic wave transducer," vol. 7268, no. 2, pp. 72680M–72680M–8, 2008.

[32] R. Arsat, X. F. Yu, Y. X. Li, W. Wlodarski, and K. Kalantar-Zadeh, "Hydrogen gas sensor based on highly ordered polyaniline nanofibers," vol. 137, pp. 529–532, 2009.

[33] A. Z. Sadek, W. Wlodarski, K. Shin, R. B. Kaner, and K. Kalantar-Zadeh, "A room temperature polyaniline/SnO_2 nanofiber composite based layered ZnO/64° YX $LiNbO_3$ SAW hydrogen gas sensor," pp. 208–211, 2006.

[34] A. Z. Sadek, W. Wlodarski, K. Shin, R. B. Kaner, and K. Kalantar-Zadeh, "A polyaniline/WO_3 nanofiber composite-based ZnO/64° YX $LiNbO_3$ SAW hydrogen gas sensor," *Synth. Met.*, vol. 158, pp. 29–32, 2008.

[35] T. Zhang, S. Mubeen, N. V Myung, and M. A. Deshusses, "Recent progress in carbon nanotube-based gas sensors," vol. 19, 2008.

[36] O. K. Varghese, P. D. Kichambre, D. Gong, K. G. Ong, E. C. Dickey, and C. A. Grimes, "Gas sensing characteristics of multi-wall carbon nanotubes," *Sens. Actuators B Chem.*, vol. 81. pp. 32–41, 2001.

[37] W. S. Cho, S. Il Moon, K. K. Paek, Y. H. Lee, J. H. Park, and B. K. Ju, "Patterned multiwall carbon nanotube films as materials of NO_2 gas sensors," *Sens. Actuators B Chem.*, vol. 119, pp. 180–185, 2006.

[38] L. Zhao, M. Choi, H.-S. Kim, and S.-H. Hong, "The effect of multiwalled carbon nanotube doping on the CO gas sensitivity of SnO_2-based nanomaterials," *Nanotechnology*, pp. 445501, 2007.

[39] A. H. Jayatissa, S. Member, and K. Guo, "Multiwalled carbon nanotube-based hydrogen gas sensors," pp. 0–4, 2008.

[40] M. Kumar and Y. Ando, "Chemical vapor deposition of carbon nanotubes: a review on growth mechanism and mass production," *J. Nanosci. Nanotechnol.*, vol. 10, no. 6, pp. 3739–3758, 2010.

[41] M. Penza, F. Antolini, and M. V. Antisari, "Carbon nanotubes as SAW chemical sensors materials," vol. 100, pp. 47–59, 2004.

[42] J. Suehiro, H. Imakiire, S. I. Hidaka, W. Ding, G. Zhou, K. Imasaka, and M. Hara, "Schottky-type response of carbon nanotube NO_2 gas sensor fabricated onto aluminum electrodes by dielectrophoresis," *Sens. Actuators B Chem.*, vol. 114, pp. 943–949, 2006.

[43] M. Penza, F. Antolini, and M. Vittori-Antisari, "Carbon nanotubes-based surface acoustic waves oscillating sensor for vapour detection," *Thin Solid Films*, vol. 472, pp. 246–252, 2005.

[44] C. E. Cava, R. V. Salvatierra, D. C. B. Alves, A. S. Ferlauto, A. J. G. Zarbin, and L. S. Roman, "Self-assembled films of multi-wall carbon nanotubes used in gas sensors to increase the sensitivity limit for oxygen detection," *Carbon N. Y.*, vol. 50, pp. 1953–1958, 2012.

[45] W.-D. Zhang and W.-H. Zhang, "Carbon nanotubes as active components for gas sensors," *J. Sensors*, vol. 2009, pp. 1–16, 2009.

[46] M. K. Kumar and S. Ramaprabhu, "Nanostructured Pt functionlized multiwalled carbon nanotube based hydrogen sensor," *J. Phys. Chem. B*, vol. 110, pp. 11291–11298, 2006.

[47] M. Penza, P. Aversa, G. Cassano, W. Wlodarski, and K. Kalantar-Zadeh, "Layered SAW gas sensor with single-walled carbon nanotube-based nanocomposite coating," *Sens. Actuators B Chem.*, vol. 127, pp. 168–178, 2007.

[48] Z. Yunusa, M. N. Hamidon, A. Ismail, M. M. Isa, M. H. Yaacob, S. Rahmanian, S. A. Ibrahim, and A. A. A. Shabaneh, "Development of a hydrogen gas sensor using a double saw resonator system at room temperature," *Sensors MDPI*, vol. 15, pp. 4749–4765, 2015.

[49] M. David, M. Arab, C. Martino, L. Delmas, F. Guinneton, and J. Gavarri, "Carbon nanotubes/ceria composite layers deposited on surface acoustic wave devices for gas detection at room temperature," *Thin Solid Films*, vol. 520, no. 14, pp. 4786–4791, 2012.

[50] I. Sayago, M. J. Fernández, J. L. Fontecha, M. C. Horrillo, C. Vera, I. Obieta, and I. Bustero, "Surface acoustic wave gas sensors based on polyisobutylene and carbon nanotube composites," *Sens. Actuators B Chem.*, vol. 156, no. 1, pp. 1–5, 2011.

[51] I. Sayago, M. J. Fernández, J. L. Fontecha, M. C. Horrillo, C. Vera, I. Obieta, and I. Bustero, "New sensitive layers for surface acoustic wave gas sensors based on polymer and carbon nanotube composites," *Sens. Actuators B Chem.*, vol. 175, pp. 67–72, 2012.

[52] M. Asad and M. H. Sheikhi, "Surface acoustic wave based H2S gas sensors incorporating sensitive layers of single wall carbon nanotubes decorated with Cu nanoparticles," *Sens. Actuators B Chem.*, vol. 198, pp. 134–141, 2014.

[53] Y. J. Guo, J. Zhang, C. Zhao, P. A. Hu, X. T. Zu, and Y. Q. Fu, "Graphene/$LiNbO_3$ surface acoustic wave device based relative humidity sensor," *Optik (Stuttg).*, vol. 125, pp. 5800–5802, 2014.

[54] S. Thomas, M. Cole, A. De Luca, F. Torrisi, A. C. Ferrari, F. Udrea, and J. W. Gardner, "Graphene-coated Rayleigh SAW resonators for NO_2 detection," *Procedia Eng.*, vol. 87, no. 2, pp. 999–1002, 2014.

[55] R. Arsat, M. Breedon, M. Shafiei, P. G. Spizziri, S. Gilje, R. B. Kaner, K. Kalantar-zadeh, and W. Wlodarski, "Graphene-like nano-sheets for surface acoustic wave gas sensor applications," *Chem. Phys. Lett.*, vol. 467, pp. 344–347, 2009.

[56] S. Gupta, S. Chatterjee, A. K. Ray, and A. K. Chakraborty, "Graphene–metal oxide nanohybrids for toxic gas sensor: a review," *Sens. Actuators B Chem.*, vol. 221, no. 2, pp. 1170–1181, 2015.

[57] Z. Yunusa, S. A. Rashid, M. N. Hamidon, S. Hafiz, I. Ismail, and S. Rahmanian, "Synthesis of Y-tip graphitic nanoribbons from alcohol catalytic chemical vapor deposition on piezoelectric substrate," *J. Nanomater. Hindawi*, vol. 2015, pp. 2–9, 2015.

INTECH

INTECH

INTECH